ATSHA204A Microchip CryptoAuthentication Data Sheet

Features

- Crypto Element with Protected Hardware-Based Key Storage
- Secure Symmetric Authentication Device Host and Client Operations
- Superior SHA-256 Hash Algorithm with Message Authentication Code (MAC) and Hash-Based Message Authentication Code (HMAC) Options
- Best-in-class, 256-bit Key Length; Storage for Up to 16 Keys
- Guaranteed Unique 72-bit Serial Number
- Internal, High-quality Random Number Generator (RNG)
- 4.5 kb EEPROM for Keys and Data
- 512 bit OTP (One Time Programmable) Bits for Fixed Information
- Multiple I/O Options
  - UART-compatible High-Speed, Single-Wire Interface
  - 1 MHz I^2C Interface
- 2.0V to 5.5V Supply Voltage Range
- 1.8V to 5.5V Communications Voltage Range
- <150 nA Sleep Current
- Secure Download and Boot
  - Ecosystem Control
  - Message Security
  - Anti-Cloning
- 8-lead SOIC, 8-lead TSSOP [(2)], 3-lead SOT23, 8-pad UDFN and 3-lead CONTACT Packages

Applications

- Secure Download and Boot
- Ecosystem Control
- Anti-cloning
- Message Security

© 2018 Microchip Technology Inc.

Package Types

Table 1. Pin Configuration

Pin Name	Function
NC	No Connect
GND	Ground
SDA	Serial Data
SCL	Serial Clock Input
V_{CC}	Power Supply

Figure 1. Pinouts[1]

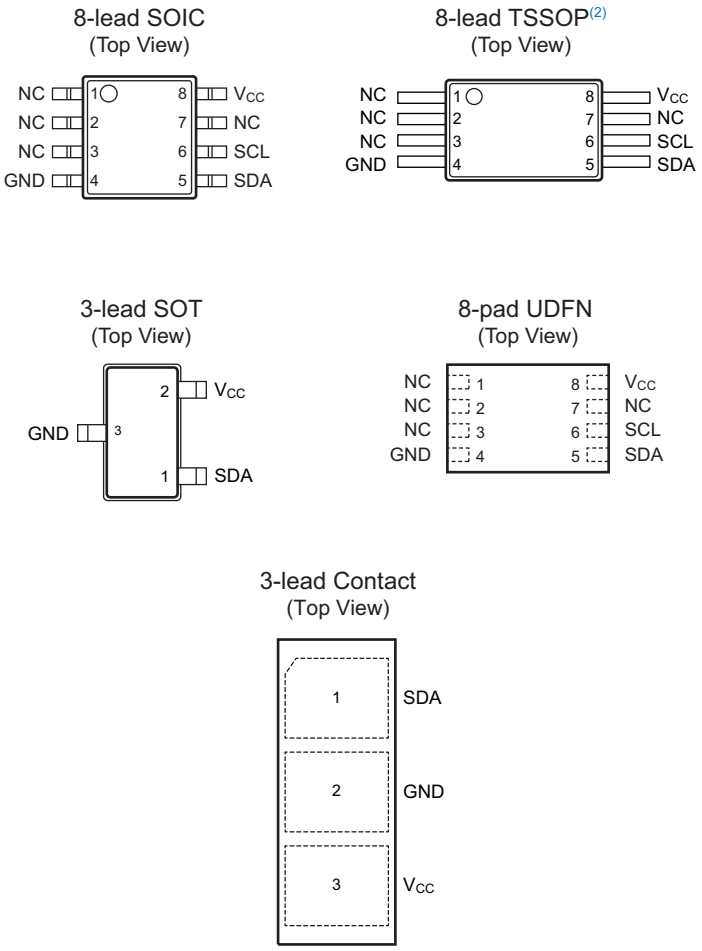

Note:

1. Drawings are not to scale.
2. Not recommended for new design.

Table of Contents

Features 1

Applications 1

Package Types 2

1. Introduction 5
   - 1.1. Applications 5
   - 1.2. Device Features 5
   - 1.3. Cryptographic Operation 6

2. Device Organization 8
   - 2.1. EEPROM Organization 8
   - 2.2. Static RAM (SRAM) 17

3. Security Features 19
   - 3.1. Physical Security 19
   - 3.2. Random Number Generator (RNG) 19

4. General I/O Information 20
   - 4.1. Byte and Bit Ordering 20

5. Single-Wire Interface 22
   - 5.1. I/O Tokens 22
   - 5.2. I/O Flags 23
   - 5.3. Synchronization 24
   - 5.4. Sharing the Interface 24
   - 5.5. Transaction Example 25
   - 5.6. Wiring Configuration for Single-Wire Interface 26

6. I^2C Interface 28
   - 6.1. I/O Conditions 28
   - 6.2. I^2C Transmission to the ATSHA204A Device 30
   - 6.3. I^2C Transmission from the ATSHA204A Device 32
   - 6.4. Address Counter 32
   - 6.5. I^2C Synchronization 33
   - 6.6. Transaction Example 34

7. Electrical Characteristics 35
   - 7.1. Absolute Maximum Ratings 35
   - 7.2. Reliability 35
   - 7.3. AC Parameters — All I/O Interfaces 35
   - 7.4. DC Parameters — All I/O Interfaces 39

8. Security Commands 42

© 2018 Microchip Technology Inc.

8.1. I/O Blocks....42
8.2. Sleep Sequence....43
8.3. Idle Sequence....43
8.4. Watchdog Failsafe....43
8.5. Command Sequence....44

9. Compatibility....66

10. Mechanical....67
10.1. Pinout....67

11. Package Marking Information....68

12. Package Drawings....69
12.1. 8-pad UDFN....69
12.2. 8-lead SOIC....72
12.3. 8-lead TSSOP....75
12.4. 3 Lead Contact....77
12.5. 3-lead SOT23....79

13. Reference and Application Notes....83
13.1. SHA-256....83
13.2. HMAC/SHA-256....83
13.3. Key Values....84

14. Revision History....88

The Microchip Web Site....89

Customer Change Notification Service....89

Customer Support....89

Product Identification System....90

Microchip Devices Code Protection Feature....91

Legal Notice....91

Trademarks....91

Quality Management System Certified by DNV....92

Worldwide Sales and Service....93

© 2018 Microchip Technology Inc.

1. Introduction

The following sections introduce the features and functions of the Microchip ATSHA204A crypto element device.

1.1 Applications

The ATSHA204A is a member of the Microchip CryptoAuthentication™ family of high-security hardware authentication devices. It has a flexible command set that allows use in many applications, including the following:

- **Anti-Counterfeiting**
  Validates that a removable, replaceable, or consumable client is authentic. Example of clients could be printer ink tanks, electronic daughter cards, medical disposables, or spare parts. The device can also be used to validate (authenticate) a software/firmware module or memory storage element.
- **Protecting Firmware or Media**
  Validates code that is stored in flash memory at boot time to prevent unauthorized modifications (this is also known as secure boot), encrypts downloaded media files and uniquely encrypts code images to be usable on a single system only.
- **Exchanging Session Keys**
  Securely and easily exchanges stream encryption keys for use by an encryption/decryption engine in the system microprocessor to manage a confidential communications channel, an encrypted download and similar items.
- **Storing Data Securely**
  Stores secret keys for use by crypto accelerators in standard microprocessors. It can also be used to store small quantities of data necessary for configuration, calibration, ePurse value, consumption data, or other secrets. Programmable protection up through encrypted/authenticated reads and writes.
- **Checking User Password**
  Validates user-entered passwords without letting the expected value become known, mapping simple passwords to complex ones and securely exchanging password values with remote systems.

1.2 Device Features

The ATSHA204A device includes an Electrically Erasable Programmable Read-Only Memory (EEPROM) array that can be used for key storage, miscellaneous read/write data, read-only, secret data, consumption logging and security configuration. Access to the various sections of memory can be restricted in a variety of ways and the configuration can then be locked to prevent changes. See Section **EEPROM Organization** for details.

The ATSHA204A features a wide array of defense mechanisms specifically designed to prevent physical attacks on the device itself or logical attacks on the data transmitted between the device and the system see Section **Security Features** for more details. Hardware restrictions on the way keys are used or generated provide further defense against certain styles of attack.

Access to the device is made through a standard I^2C interface at speeds of up to 1 Mb/s. see Section **I^2C Interface** for details. It is compatible with I^2C interface specifications. The device also supports a Single-Wire Interface (SWI) that can reduce the number of GPIOs required on the system processor and/or reduce the number of pins on connectors. See Section **Single-Wire Interface** for more details.

© 2018 Microchip Technology Inc.

Using the Single-Wire Interface, multiple ATSHA204A devices can share the same bus, which saves processor GPIO usage in systems with multiple clients such as different color ink tanks or multiple spare parts, as examples. See Section **Sharing the Interface** and Section **`Pause` Command** for details on how this is implemented.

Each ATSHA204A ships with a guaranteed unique 9-byte (72-bit) serial number. Using the cryptographic protocols supported by the device, a Host system or remote server can prove that the serial number is authentic and is not a copy. Serial numbers are often stored in a standard Serial EEPROM, which can be easily copied with no way for the Host to know if the serial number is authentic or if it is a clone. The entire serial number must be utilized to guarantee uniqueness.

The ATSHA204A can generate high-quality random numbers and employ them for any purpose, including as part of the crypto protocols of this device. Because each 32-byte (256-bit) random number is not dependent on past numbers generated on this or any other device, their inclusion in the protocol calculation ensures that replay attacks (for instance. re-transmitting a previously successful transaction) always fail. See Section **Random Number Generator (RNG)** and Section **`Random` Command**.

System integration is made easy by a wide supply voltage range (of 2.0V through 5.5V) and an ultra-low sleep current (of <150 nA). Complete DC parameters are found in Section **Electrical Characteristics**, which describes multiple package options, including a tiny UDFN package with a footprint of only 2.0 mm x 3.0 mm. See Section **Package Drawings** for more details and ordering codes.

See Section **Compatibility** for information regarding compatibility with the Microchip ATSHA204.

1.3 Cryptographic Operation

The ATSHA204A supports a standard challenge-response protocol to simplify programming. In its most basic installation, the Host system sends a challenge (for example a number) to the device in the Client, which combines that challenge with a secret key by using the `Message Authentication Code (MAC)` command from the system, as described in Section **`MAC` Command** and sends that response back to the system. The device uses a cryptographic hash algorithm to make that combination (which is also known as a digest). The use of a hash algorithm prevents an observer on the bus from deriving the value of the secret key, while allowing the recipient to verify that the response is correct by performing the same calculation combining the challenge with the secret to create a digest using a stored copy of the secret.

This basic operation can be expanded in many ways because of the flexible command set of the ATSHA204A. By using the `GenDig` command (Section **`GenDig` Command**), the values in other slots can be included in the response digest, which provides an effective way of proving that a data read really did come from the device, as opposed to being inserted by a man-in-the-middle attacker. This same command can be used to combine two keys with the challenge, which is useful when there are multiple layers of authentication to be performed.

The `DeriveKey` command (Section **`DeriveKey` Command**) implements a key rolling scheme. Depending upon the command mode parameter, the resulting operation can be similar to that implemented in a remote-controlled garage door opener, for example. Each time the key is used, the current value of the key is cryptographically combined with a value specific to that system and that result then forms the key for the next cryptographic operation. Even if an attacker obtains the value of one key, that key disappears forever with the next use.

`DeriveKey` can also be used to generate new random keys that might be valid only for a particular Host ID, for a particular time period, or for some other restricted condition. Each generated key is different from

any other key ever generated on any device. By “activating” a Host-Client pair in the field in this manner, a clone of a single Client can not work on any other Host.

In a Host-Client configuration where the Host (for example a mobile phone) needs to verify a Client (for instance an OEM battery), there is a need to store the secret in the Host in order to validate the response from the Client. The `CheckMac` command (Section **`CheckMac` Command**) allows the Host device to securely store the Client’s secret and hide the correct response value from the pins, returning only a yes/no answer to the system.

Where a user-entered password is required, the `CheckMac` command also provides a way to both verify the password without exposing it on the communications bus and map the password to a stored value that can have much higher entropy. See Section **Password Checking** for details.

Finally, the hash combination (for example digest) of a challenge and secret key can be kept on the device and XORed with the contents of a slot to implement an encrypted read (Section **`Read` Command**), or it can be XORed with encrypted input data to implement an encrypted write (Section **`Write` Command**).

Each of these operations can be protected against replay attacks by including a random nonce (Section **`Nonce` Command**) in the calculation.

All security functions are implemented using the industry-standard SHA-256 secure hash algorithm, which is part of the latest set of high-security cryptographic algorithms recommended by various government agencies and cryptographic experts. Section **SHA-256** includes a reference to the algorithm details. If desired, the SHA-256 algorithm can also be included in an HMAC sequence (See Section **`HMAC` Command**). The ATSHA204A employs full-sized, 256-bit secret keys to prevent any kind of exhaustive attack.

© 2018 Microchip Technology Inc.

2. Device Organization

The device contains the following memory blocks:

- EEPROM
- SRAM

2.1 EEPROM Organization

The EEPROM contains a total of 664-bytes (5312-bits) and is divided into the following zones:

Table 2-1. ATSHA204A Zones

Zone	Description	Nomenclature
Data	Zone of 512 bytes (4.0 kb) split into 16 general purpose read-only or read/write memory slots of 32 bytes (256 bits) each that can be used to store keys, calibration data, model number, or other information, typically that relate to the item to which the ATSHA204A device is attached. Access policy of each data slot is determined by the values programmed into the corresponding configuration values. However, the policies become effective upon setting the LockValue byte only.	Slot<YY> = The entire contents stored in Slot YY of the Data zone.
Configuration	Zone of 88 bytes (704 bits) EEPROM that contains the serial number and other ID information, as well as, access the permission information for each slot of the data memory. The values programmed into the configuration zone determine the access policy of how each data slot responds. The configuration zone can be modified until it has been locked (`LockConfig` set to !=0x55). In order to enable the access policies, the LockValue byte must be set. (See section above)	SN<a:b> = A range of bytes within a field of the Configuration zone.
One Time Programmable (OTP)	Zone of 64 bytes (512 bits) of OTP bits. Prior to locking the OTPzone, the bits may be freely written using the standard `Write` command. The OTP zone can be used to store read-only data or one-way fuse type consumption logging information.	OTP<bb> = A byte within the OTP zone, while OTP<aa:bb> indicates a range of bytes.

Terms discussed within this document have the following meanings:

Table 2-2. Document Terms

Term	Meaning
Block	A single 256-bit (32-byte) area of a particular memory zone. Industry SHA-256 documentation uses the term “block” to indicate a 512-bit section of the message input. In addition, the I/O section of this document uses the term “block” to indicate a variable-length aggregate element transferred between the system and the device.
Slot	For the data zone the terms “Block” and “Slot” can be used interchangeably. For the OTP and Config zone there are multiple blocks of 32 Bytes each.
param<b>	Indicates one bit of parameter or byte field.
SRAM	Contains input and output buffers, as well as state storage locations. See Section **Static RAM (SRAM)**

© 2018 Microchip Technology Inc.

On shipment from Microchip, the EEPROM contains factory test data that can be used for fixed-value board testing. This data must be overwritten with the desired contents prior to locking the configuration and/or data sections of the device. See the **Microchip website** for the document containing the specific shipment values.

2.1.1 EEPROM Data Zone

The Data zone is 512-bytes (4 kb), is part of the EEPROM array and can be used for secure storage purposes.

Prior to locking the configuration section using `Lock(Config)`, the Data zone is inaccessible and can be neither read nor written. After configuration locking, the entire Data zone can be written using the `Write` command. If desired, the data to be written can be encrypted.

In the following table, “Byte Address” is the byte address within the Data zone for the first byte in the respective slot. Because all `Reads` and `Writes` with the ATSHA204A are performed on a word (4-byte or 32-byte) basis and the word address in the table below should be used for the address parameter passed to the `Read` and `Write` commands.

Table 2-3. Data Zone Slots

Slot	Byte Address (Hex)	Word Address (Hex)	Slot	Byte Address (Hex)	Word Address (Hex)
0	0x0000	0x0000	8	0x0100	0x0040
1	0x0020	0x0008	9	0x0120	0x0048
2	0x0040	0x0010	10	0x0140	0x0050
3	0x0060	0x0018	11	0x0160	0x0058
4	0x0080	0x0020	12	0x0180	0x0060
5	0x00A0	0x0028	13	0x01A0	0x0068
6	0x00C0	0x0030	14	0x01C0	0x0070
7	0x00E0	0x0038	15	0x01E0	0x0078

2.1.2 Configuration Zone

The 88-bytes (704-bits) in the Configuration zone contain manufacturing identification data, general device and system configuration and access restriction control values for the slots within the Data zone. The values of these bytes can always be obtained using the `Read` command. The bytes of this zone are arranged as shown in the following table.

Table 2-4. Configuration Zone

Word	Byte 0	Byte 1	Byte 2	Byte 3	Default	Write Access	Read Access
0x00	SN<0:3>				01 23 xx xx	Never	Always
0x01	RevNum				xx xx xx xx	Never	Always
0x02	SN<4:7>				xx xx xx xx	Never	Always
0x03	SN<8>	Reserved	I2C_Enable	Reserved	EE 55 xx 00	Never	Always
0x04	I2C_Address	CheckMacConfig	OTP Mode	Selector Mode	C8 00 55 00	If Config Is unlocked	Always

© 2018 Microchip Technology Inc.

Word	Byte 0	Byte 1	Byte 2	Byte 3	Default	Write Access	Read Access
0x05	SlotConfig 0		SlotConfig 1		8F 80 80 A1	If Config Is unlocked	Always
0x06	SlotConfig 2		SlotConfig 3		82 E0 A3 60	If Config Is unlocked	Always
0x07	SlotConfig 4		SlotConfig 5		94 40 A0 85	If Config Is unlocked	Always
0x08	SlotConfig 6		SlotConfig 7		86 40 87 07	If Config Is unlocked	Always
0x09	SlotConfig 8		SlotConfig 9		0F 00 89 F2	If Config Is unlocked	Always
0x0A	SlotConfig 10		SlotConfig 11		8A 7A 0B 8B	If Config Is unlocked	Always
0x0B	SlotConfig 12		SlotConfig 13		0C 4C DD 4D	If Config Is unlocked	Always
0x0C	SlotConfig 14		SlotConfig 15		C2 42 AF 8F	If Config Is unlocked	Always
0x0D	UseFlag 0	UpdateCount 0	UseFlag 1	UpdateCount 1	FF 00 FF 00	If Config Is unlocked	Always
0x0E	UseFlag 2	UpdateCount 2	UseFlag 3	UpdateCount 3	FF 00 FF 00	If Config Is unlocked	Always
0x0F	UseFlag 4	UpdateCount 4	UseFlag 5	UpdateCount 5	FF 00 FF 00	If Config Is unlocked	Always
0x10	UseFlag 6	UpdateCount 6	UseFlag 7	UpdateCount 7	FF 00 FF 00	If Config Is unlocked	Always
0x11	LastKeyUse 0	LastKeyUse 1	LastKeyUse 2	LastKeyUse 3	FF FF FF FF	If Config Is unlocked	Always
0x12	LastKeyUse 4	LastKeyUse 5	LastKeyUse 6	LastKeyUse 7	FF FF FF FF	If Config Is unlocked	Always
0x13	LastKeyUse 8	LastKeyUse 9	LastKeyUse 10	LastKeyUse 11	FF FF FF FF	If Config Is unlocked	Always
0x14	LastKeyUse 12	LastKeyUse 13	LastKeyUse 14	LastKeyUse 15	FF FF FF FF	If Config Is unlocked	Always
0x15	UserExtra	Selector	LockValue[1]	LockConfig	00 00 55 55	Through `UpdateExtra` Command Only	Always

Note:

1. LockValue was previously known as LockData.

2.1.2.1 I2C_Enable

Bit 7–1: Ignored and set by Microchip.

Bit 0: 0 = Single-Wire Interface Mode.
1= I²C interface Mode.

2.1.2.2 I2C_Address

I²C Mode I2C_Enable<0> = 1

Bits 7 – 1: I²C device address

Bit 3: TTL Enable (Dual purpose bit)
Part of I²C Address and set's the threshold level.
0= Input level uses a fixed reference.
1 = Input level uses the V_{CC} as reference.

Bit 0: Ignored.

Single-Wire Mode I2C_Enable<0> = 0

Bits 7–4: Ignored.

Bit 3: TTL Enable
0= Input level uses a fixed reference.
1 = Input level uses the V_{CC} as reference.

Bits 2–0: Ignored.

2.1.2.3 CheckMacConfig

This byte applies only to the `CheckMac`, `Read` and `Write` commands:

- **Read and Write:** CheckMacConfig<0> controls Slots 0 and 1, CheckMacConfig<1> controls Slots 2 and 3 and so on. Any encrypted `Read` or `Write` command fails if the value in TempKey.SourceFlag does not match the corresponding bit in this byte. This byte is ignored for clear text reads and writes.
- **CheckMac:** CheckMacConfig<0> controls slot 1, CheckMacConfig<1> controls Slot 3 and so on. The copy function can only be enabled if the CheckMacSource value corresponding to the target slot matches the value of Mode bit 2 of the `CheckMac` command. The command fails if Mode bit 2 does not match TempKey.SourceFlag, so this is equivalent to requiring the corresponding bit in this byte to match TempKey.SourceFlag.

2.1.2.4 OTP Mode

`0xAA` (Read-only mode) = When OTP zone is locked, writes are disabled and reads of all words are permitted.

`0x55` (Consumption mode) = Writes to the OTP zone when the OTP zone is locked causes the bits to transition only from a one to a zero. Reads of all words are permitted.

`0x00` (Legacy mode) = When OTP zone is locked, writes are disabled, reads of Words 0 and 1 and 32-byte reads are disabled.

All other modes are reserved.

© 2018 Microchip Technology Inc.

2.1.2.5 Selector Mode

If `0x00`, then the Selector is updated with `UpdateExtra`.

All other values can only allow the Selector to be updated if its value is zero.

2.1.2.6 Slot Config

See Table **SlotConfig Bits (Per Slot)**.

2.1.2.7 UseFlag

For uses with “limited-use slots”. The quantity of “`1`” bits represents the number of times that slots 0 thru 7 may be used before being disabled.

2.1.2.8 UpdateCount

Indicates how many times slots 0 through 7 have been updated with `DeriveKey`.

2.1.2.9 LastKeyUse

Used to control limited use for Slot 15. Each “`1`” bit represents a remaining use for Slot 15. Applies only if SlotConfig<5> LimitedUse is set.

2.1.2.10 UserExtra

For general system use, can be modified through the `UpdateExtra` command.

2.1.2.11 Selector

Selects which device remains in active mode after the execution of the `Pause` command.

2.1.2.12 LockValue

Controls the Data and OTP zones are unlocked and can be freely written but not read.

`0x55` = The Data and OTP zones are unlocked and has write access.

`0x00` = The Data and OTP zones are locked and take on the access policies defined in the configuration zone. Slots in the Data zone can only be modified based on the corresponding WriteConfig fields. The OTP zone can only be modified based on the OTP mode.

2.1.2.13 LockConfig

Configuration zone access.

`0x55` = The Configuration zone has write access (unlocked).

`0x00` = The Configuration zone does not have write access (locked).

2.1.2.14 SlotConfig (Bytes 20 – 51)

The 16 SlotConfig elements configure the access protections for each of the 16 slots within the ATSHA204A. Each configuration element consists of 16 bits, which control the usage and access for that particular slot or key. The SlotConfig field is interpreted according to the table below when the Data zone is locked. When the Data zone is unlocked, these restrictions do not apply and all slots may be freely written and none may be read.

Table 2-5. SlotConfig Bits (Per Slot)

Bit	Name	Description
15-12	WriteConfig	See detailed function definition for use.
11-8	WriteKey	Slot of the key to be used to validate encrypted writes.

Bit	Name	Description
7	IsSecret	0 = The slot is not secret and allows clear read, clear write, no MAC check and no `Derivekey` Command. 1 = The slot is secret. Reads and writes if allowed, must be encrypted.
6	EncryptRead	0 = Clear reads are permitted. 1 = Requires the slot to be Secret and encrypted read to access.
5	LimitedUse(1)	0 = No limit on the number of time the key can be used. 1 = Limit on the number of time the key can be used based on the UseFlag (or LastKeyUse) for the slot.
4	CheckOnly	0 = This slot can be used for all crypto commands. 1 = This slot can only be used for `CheckMac` and `GenDig` followed by `CheckMac` Commands.
3-0	ReadKey	Slot of the key to be used for encrypted reads. If `0x0`, then this slot can be used as the source slot for the `CheckMac/Copy` Command.

Note:

1. LimitedUse bit was previously named SingleUse.

Table 2-6. Write Configuration Bits — `Derivekey` Command

Bit 15	Bit 14	Bit 13	Bit 12	Source Key(1)	Description
0	X	1	0	Target	`DeriveKey` command can be run without authorizing MAC (Roll).
1	X	1	0	Target	Authorizing MAC required for `DeriveKey` command (Roll).
0	X	1	1	Parent	`DeriveKey` command can be run without authorizing MAC (Create).
1	X	1	1	Parent	Authorizing MAC required for `DeriveKey` command (Create).
X	X	0	X	—	Slots with this value in the WriteConfig field may not be used as the target of the `DeriveKey` command.

Note:

1. The source key for the computation performed by the `DeriveKey` command can either be the key directly specified in Param2 (the “Target”) or the key at SlotConfig<Param2>. WriteKey (the “Parent”).
   See Section **Key Values** for more details.

Table 2-7. Write Configuration Bits — `Write` Command

Bit 15	Bit 14	Bit 13	Mode Name	Description
0	0	0	Always	Clear text writes are always permitted on this slot. Slots set to “always” should never be used as key storage. Either 4 or 32 bytes may be written to this slot.
X	0	1	Never	Writes are never permitted on this slot using the `Write` command Slots set to “never” can still be used as key storage.
1	0	X	Never	Writes are never permitted on this slot using the `Write` command Slots set to “never” can still be used as key storage.
X	1	X	Encrypt	Writes to this slot require a properly computed MAC and the input data must be encrypted by the system with WriteKey using the encryption algorithm documented in the `Write` command description Section (8.5.18 Write Command). 4-byte writes to this slot are prohibited.

The 4-bit WriteConfig field is interpreted by the `Write` command as shown in Table **Write Configuration Bits —Write Command**, where X means don’t care.

The tables overlap. For example, a code of `0b0110` indicates that a slot can be written in encrypted form by using the `Write` command and it can also be the target of an unauthorized `DeriveKey` command with the target as the source.

The IsSecret bit controls internal circuitry necessary for proper security for slots in which reads and/or writes must be encrypted or are prohibited altogether. It must also be set for all slots that are to be used as keys, including those created or modified with `DeriveKey`. Specifically, to enable proper device operation, this bit must be set unless WriteConfig is “Always”. 4-byte accesses are prohibited to/from slots in which this bit is set.

Slots used to store key values should always have IsSecret set to one and EncryptRead set to zero (reads prohibited) for maximum security. For fixed key values, WriteConfig should be set to “Never”. When configured in this way, there is no way to read or write the key after the Data zone is locked. It may only be used for crypto operations.

Some security policies require secrets to be updated from time to time. The ATSHA204A supports this capability in the following way:

- WriteConfig for the particular slot should be set to “Encrypt” and SlotConfig.WriteKey should point back to the same slot by setting WriteKey to the slot ID. A standard `Write` command can be then used to write a new value to this slot provided that the authentication MAC is computed using the old (current) key value.

2.1.2.15 Special Memory Values in the Configuration Zone (Bytes 0 – 12)

Various fixed information is included in the ATSHA204A that can never be written under any circumstances and can always be read, regardless of the state of the lock bits.

- **SerialNum**
  Nine bytes (SN<0:8>) which together form a unique value that is never repeated for any device in the CryptoAuthentication family. The serial number is divided into two groups:
  1.1. **SN<0:1> and SN<8>**
  The values of these bits are fixed at manufacturing time in most versions of the ATSHA204A. Their default value is (`0x01 0x23 0xEE`). These 24 bits are always included in the SHA-256 computations made by the ATSHA204A.

1.2. **SN<2:7>**
The values of these bits are programmed by Microchip during the manufacturing process and are different for every die. These 6-bytes (48-bits) are optionally included in some SHA-256 computations made by the ATSHA204A

- **RevNum**
Four bytes of information that are used by Microchip to provide manufacturing revision information. These bytes can be freely read as RevNum<0:3>, but should never be used by system software, because they may change due to a silicon revision.

2.1.3 One Time Programmable (OTP) Zone

The OTP zone of 64 bytes (512 bits) is part of the EEPROM array and can be used for read-only storage.

Prior to locking the configuration section using `Lock(LockConfig)`, the OTP zone is inaccessible and can be neither read nor written. After configuration locking, but prior to locking of the OTP zone using `Lock(LockValue)`, the entire OTP zone can be written using the `Write` command. If desired, the data to be written can be encrypted. When unlocked the OTP zone cannot be read.

Once the OTP zone is locked, the OTP mode byte in the Configuration zone controls the permissions of this zone, as follows:

- **Read-only Mode**
The data cannot be modified and would be used to store fixed model numbers, calibration information, manufacturing history and/or other data that should never change. The `Write` command always returns an error and leaves the memory unmodified. All 64-bytes within the OTP section are always available for reading using either 4-byte or 32-byte reads.
- **Consumption Mode**
The bits function as one-way fuses and can be used to track consumption or usage of the item to which the ATSHA204A is attached. For examples, in a battery, they might be used to track charging cycles or use time; in a printer ink cartridge, they might track the quantity of material consumed; in a medical device, they might track the number of permitted uses for a limited use item. In this mode, the `Write` command can only cause bits to transition from a one to a zero. Logically, this means the data value in the input parameter list is AND'ed with the current value in the word(s) and the result written back to memory. As an example, writing a value of `0xFF` results in no change to the byte and writing a value of `0x00` causes the byte in memory to go to zero, regardless of the previous value. Once a bit has transitioned to a zero, it can never transition back to a one.
- **Legacy Mode**
The operation of the OTP zone is consistent with the fuse array on the Microchip(Formerly Atmel) ATSA102S. Reads of words zero and one are always prohibited, while reads of the remaining 14 words are always permitted. Only 4-byte (32-bit) reads are permitted and any attempt to execute a 32-byte (256-bit) read results in an error return code. All Write operations to the OTP zone are prohibited. See Section 9. Compatibility for more of the Microchip ATSA102S compatibility details.

All OTP zone bits have a value of one on shipment from the Microchip factory.

Table 2-8. OTP Zone

Word (HEX)	Address (HEX)	Default
0x00	0x00	0xFFFFFFFF
0x01	0x04	0xFFFFFFFF
0x02	0x08	0xFFFFFFFF

© 2018 Microchip Technology Inc.

Word (HEX)	Address (HEX)	Default
0x03	0x0C	0xFFFFFFFF
0x04	0x10	0xFFFFFFFF
0x05	0x14	0xFFFFFFFF
0x06	0x18	0xFFFFFFFF
0x07	0x1C	0xFFFFFFFF
0x08	0x20	0xFFFFFFFF
0x09	0x24	0xFFFFFFFF
0x0A	0x28	0xFFFFFFFF
0x0B	0x2C	0xFFFFFFFF
0x0C	0x30	0xFFFFFFFF
0x0D	0x34	0xFFFFFFFF
0x0E	0x38	0xFFFFFFFF
0x0F	0x3C	0xFFFFFFFF

2.1.4 Device Locking

There are two separate lock bytes for the device:

- One to lock the configuration zone (that is controlled by LockConfig, byte 87).
- One to lock both the Data and OTP zones (that are controlled by LockValue, byte 86). This enables the access polices for each Data zone slot based on the Slot configuration.

These locks are stored within separate bytes in the Configuration zone and can be modified only through the `Lock` command. After a memory zone is locked, there is no way to unlock it. Locking of the Data/OTP zone does not mean the slots can not be modified. The slots can be modified based on the access policies defined by the Slot configuration.

The device should be personalized at the system manufacturer with the desired configuration information and the Configuration zone should be locked. When this lock is complete, all necessary writes of public and secret information into the EEPROM slots should be performed using encrypted writes if appropriate. Upon completion of writes to the data and OTP zones, the Data and OTP zones the LockValue byte should be written.

It is vital that the LockValue byte be set to lock prior to release of the system containing the device into the field in order to protect the data stored in the Data and OTP zones. Failure to lock these zones may permit modification of any secret keys and may lead to other security problems.

Any attempt to read or write the Data or OTP sections prior to locking the configuration section causes the device to return an error.

Contact Microchip for optional secure personalization services.

2.1.4.1 Configuration Zone Locking

Certain bytes within the configuration zone cannot be modified, regardless of the state of LockConfig. Access to the remainder of the bytes within the zone is controlled using the LockConfig byte in the configuration zone, as shown in the table below. Throughout this document, if LockConfig is `0x55`, then the configuration zone is said to be unlocked; otherwise it is locked.

Table 2-9. Configuration Zone Locking

Lock State	Read Access	Write Access
LockConfig == `0x55` (unlocked)	Read	Write
LockConfig != `0x55` (locked)	Read	<never>

2.1.4.2 Data and OTP Zone Locking

Throughout this document, if LockValue is `0x55`, then both the Data and OTP zones are said to be unlocked; otherwise they are locked.

There is neither read nor write access to the Data and OTP zones prior to locking of the Configuration zone.

Table 2-10. Data and OTP Zone Access Restrictions

Lock State	Read Access	Write Access
LockValue == `0x55` (unlocked)	<never>	Write
LockValue != `0x55` (locked)	Read(1)	Write(1)

Note:

1. Based on Slot Configuration for a given slot.

2.1.4.3 OTP Zone Locking

Reads and writes of the OTP zone depend upon the state of the LockConfig, LockValue and OTP mode bytes in the Configuration zone.

2.2 Static RAM (SRAM)

The device includes an SRAM array that is used to store the input command or output result, intermediate computation values and/or an ephemeral key. The entire contents of this memory are always invalidated whenever the device goes into sleep mode or the power is removed. The ephemeral key is named TempKey and can be used as an input to the `MAC`, `HMAC`, `CheckMac`, `GenDig` and `DeriveKey` commands. It is also used as the Data protection (Encryption or Decryption) key by the `Read` and `Write` commands. See Section **TempKey**.

2.2.1 TempKey

TempKey is a storage register in the SRAM array that can be used to store an ephemeral result value from the `Nonce`, `GenDig`, `CheckMac`, or `SHA` commands. The contents of this register can never be read from the device (although the device itself can read and use the contents internally).

This register contains the elements shown in the table below.

Table 2-11. TempKey Storage Register

Name	Bit Length	Description
TempKey	256 (32-bytes)	Nonce (from `Nonce` command) or Digest (from `GenDig` command).
SlotID	4	If TempKey was generated by `GenDig` (see the GenData and CheckFlag bits), these bits indicate which key was used in its computation. The four bits represent one of the slots of the Data zone.

© 2018 Microchip Technology Inc.

Name	Bit Length	Description
SourceFlag	1	The source of the randomness in TempKey: **0 =** Internally generated random number (Rand). **1 =** Input seed only, no internal random generation (Input).
GenData	1	**0 =** TempKey.SlotID is not meaningful and is ignored. **1 =** The contents of TempKey were generated by `GenDig` using one of the slots in the Data zone (and TempKey.SlotID is meaningful).
CheckFlag	1	**0 =** TempKey contents have been generated using a Nonce, SHA or GenDig without a CheckMac key restriction. **1 =** The contents of TempKey were generated by the `GenDig` command and at least one of the keys used in that generation is restricted to the `CheckMac` command (SlotConfig.CheckOnly is one)
Valid	1	**0 =** The information in TempKey is invalid. **1 =** The information in TempKey is valid.

In this specification, the name “TempKey” refers to the contents of the 32-byte (256-bit) Data register. The remaining bit fields are referred to as TempKey.SourceFlag, TempKey.GenData and so on.

The TempKey.Valid bit is cleared to zero under any of the following circumstances:

- Power-up, sleep, brown-out, watchdog expiration, or tamper detection. The contents of TempKey are however retained when the device enters idle mode.
- After the execution of any command other than `Nonce` or `GenDig`, regardless of whether or not the command execution succeeds. It may be cleared by the `CheckMac` command unless a successful copy takes place. It is not cleared if there is a communications problem, as evidenced by a Cyclic Redundancy Check (CRC) error.
- An error during the parsing or execution of a `GenDig` and/or `Nonce` command.
- Execution of `GenDig` replaces any previous output of the `Nonce` command with the output of the `GenDig` command. Execution of the `Nonce` command likewise replaces any previous output of the `GenDig` command.

© 2018 Microchip Technology Inc.

3. Security Features

3.1 Physical Security

The ATSHA204A incorporates a number of physical security features designed to protect the EEPROM contents from unauthorized exposure. The security measures include:

- An Active Shield Over the Part
- Internal Memory Encryption
- Secure Test Modes
- Glitch Protection
- Voltage Tamper Detection
- Temperature Tamper Detection

Pre-programmed transport keys stored on the ATSHA204A are encrypted in such a way as to make retrieval of their values using outside analysis very difficult.

Both the logic clock and logic supply voltage are internally generated, preventing any direct attack on these two signals using the pins of the device.

3.2 Random Number Generator (RNG)

The ATSHA204A includes a high-quality RNG that returns a 32-byte random number to the system. The device combines this generated number with a separate input number to form a nonce that is stored within the device in TempKey and may be used by subsequent commands.

The system may use this RNG for any purpose. One common purpose would be as the input challenge to the `MAC` command on a separate CryptoAuthentication device. The device provides a special random command for such purposes, which does do not affect the internally stored nonce.

To simplify system testing, prior to locking the Configuration zone the RNG always returns the following 32 byte value:

```
0xFF FF 00 00 FF FF 00 00 …
```

where `0xFF` is the first byte read from the device and is used for the SHA message.

To prevent replay attacks on encrypted data that is passed to or from the ATSHA204A, the device requires that a new, internally generated nonce be included as part of the encryption sequence used to protect the data being read or written. To implement this requirement, the data protection key generated by `GenDig` and used by the `Read` or `Write` command must use the internal RNG during the creation of the nonce.

Random numbers are generated from a combination of the output of a hardware RNG and an internal seed value, which is not externally accessible. The internal seed is stored in the EEPROM and is normally updated once after every power-up or sleep/wake cycle. After the update, this seed value is retained in SRAM registers within the device that are invalidated if the device enters sleep mode or the power is removed.

© 2018 Microchip Technology Inc.

4. General I/O Information

Communication with the ATSHA204A is achieved through one of two different protocols (I^2C or Single-Wire) and is selected based on the device ordered:

- **Single-Wire Interface**
  Uses a single GPIO connection on the system microprocessor connected to the SDA pin on the device. It permits the fewest number of connector pins to any removable/replaceable entity. The bit rate is up to 25.6 kb/s and is compatible with standard UART signaling.
- **I^2C Interface**
  This mode is compatible with the Microchip AT24C16 Serial EEPROM interface. Two pins are required, Serial Data (SDA) and Serial Clock (SCL). The I^2C interface supports a bit rate of up to 1 Mb/s.

The lowest levels of the I/O protocols are described in Section **Single-Wire Interface** and Section **I^2C Interface**. On top of the I/O protocol level, both interfaces transmit exactly the same bytes to and from the device to implement the cryptographic commands and error codes documented in Section **Security Commands**.

The device implements a failsafe internal watchdog timer that forces it into a very low-power mode after a certain time interval, regardless of any current activity. System programming must take this into consideration. See Section **Watchdog Failsafe** for details.

4.1 Byte and Bit Ordering

CryptoAuthentication devices use a common ordering scheme for bytes and also for the way in which numbers and arrays are represented in this datasheet:

- All multi-byte aggregate elements are treated as arrays of bytes and are processed in the order received or transmitted with index #0 first.
- 2-byte (16-bit) integers, typically Param2 appear on the bus LSB first.

The bit order is different depending on the I/O channel used:

- On the Single-Wire Interface, data is transferred to/from the ATSHA204A LSb first on the bus.
- On the I^2C Interface, data is transferred to/from the ATSHA204A MSb first on the bus.

4.1.1 Output Example

The following bytes are returned in this order on the bus by a 32-byte read of the configuration section with an input address of `0x0000`:

SN<0>, SN<1>, SN<2>, SN<3>, RevNum<0>, RevNum<1>, RevNum<2>, RevNum<3>, SN<4>, SN<5>, SN<6>, SN<7>, SN<8>, reserved, I2C_Enable, reserved, I2C_Address, OTPmode, SelectorMode, SlotConfig<0>.Read, SlotConfig<0>.Write, SlotConfig<1>.Read, SlotConfig<1>.Write, SlotConfig<2>.Read, SlotConfig<2>.Write, SlotConfig<3>.Read, SlotConfig<3>.Write, SlotConfig<4>.Read, SlotConfig<4>.Write, SlotConfig<5>.Read, SlotConfig<5>.Write

4.1.2 MAC Message Example

The following bytes are passed to the SHA engine for a `MAC` command using a mode value of 0x71 and a SlotID of slot x. In the example below, K<x> indicates the SlotID of slot x in the Data zone, with K<0> being the first byte on the bus for a read from or write to that slot. OTP<0> indicates the first byte on the bus for a read of the OTP zone at address zero and so on.

K<0>, K<1>, K<2>, K<3> … K<31>, TempKey<0>, TempKey<1>, TempKey<2>, TempKey<3> … TempKey<31>, Opcode (=`0x08`), Mode (=`0x71`), Param2(LSB = 0xYY), Param2(MSB = `0x00`), OTP<0>, OTP<1>, OTP<2>, OTP<3>, OTP<4>, OTP<5>, OTP<6>, OTP<7>, OTP<8>, OTP<9>, OTP<10>, SN<8>, SN<4>, SN<5>, SN<6>, SN<7>, SN<0>, SN<1>, SN<2>, SN<3>.

For more details regarding MAC messages, see Section **MAC Command**.

5. Single-Wire Interface

In the Single-Wire Interface mode, communications to and from the ATSHA204A take place over the SDA pin, a single, asynchronously timed wire and the SCL pin is ignored.

The sleep current specification values are guaranteed only if the SCL pin is held low or left unconnected.

The overall communications structure is a hierarchy: The table below shows the tokens used for the Single-Wire Interface with a standard RS-232 port. The Host UART port should be set to 7-bit data words and 230.4 kBaud data rate.

Table 5-1. Wake and I/O Tokens

Token Type	Token Value	Start (1)	Wake Token LSb: MSb							Stop (1)
			b0	b1	b2	b3	b4	b5	b6	
Wake (2)	0x00	0	0	0	0	0	0	0	0	1
Logic 0 (3)	0x7D	0	1	0	1	1	1	1	1	1
Logic 1 (3)	0X7F	0	1	1	1	1	1	1	1	1

Note:

1. All Tokens must be preceded by a LOW Start Pulse to synchronize the data capture and end with a HIGH Stop value.
2. A Wake Token creates a low pulse great enough to wake up the device.
3. Logic 0, Logic 1 I/O tokens represent a single bit of data. 8 I/O tokens would be needed to create a single byte of data.

I/O Flags - Flags consist of eight tokens (bits) that convey the direction and meaning of the next group of bits (if any) that may be transmitted. Flags are always transmitted LSb first.

Blocks - Blocks of data follow the command and transmit flags. They incorporate both a byte count and a checksum to ensure proper data transmission.

Packets - Packets of bytes form the core of the block (minus the byte count and CRC). They are either the input or output parameters of a CryptoAuthentication command or status information from the ATSHA204A.

5.1 I/O Tokens

There are a number of I/O tokens that may be transmitted over the Single-Wire Interface:

- **Input** (to the ATSHA204A)
  - Wake: wake the device up from either sleep or idle states.
  - Zero: send a single bit from the system to the device with a value of zero.
  - One: send a single bit from the system to the device with a value of one.
- **Output** (from the ATSHA204A)
  - ZeroOut: send a single bit from the device to the system with a value of zero.
  - OneOut: send a single bit from the device to the system with a value of one.

The waveforms are the same in either direction. There are some differences in timing; however, based on the expectation that the Host has a very accurate and consistent clock, while the ATSHA204A has

© 2018 Microchip Technology Inc.

significant part-to-part variability in its internal clock generator, due to normal manufacturing and environmental fluctuations.

The bit timing is designed to permit a standard UART running at 230.4 kBaud to transmit and receive the tokens efficiently. Each byte transmitted or received by the UART corresponds to a single bit received or transmitted by the device. The UART needs to be configured with 7-bits of data having `0x7F` corresponding to a Logic `1` and `0x7D` corresponding to a Logic `0`.

The Wake token is special in that it requires an extra long low pulse of t_{WLO} on the SDA pin (see Table **AC Parameters – All I/O Interfaces**), which cannot be confused with the shorter low pulses that occur during a Data token (Zero, One, ZeroOut, or OneOut). Devices that are in either the idle or sleep state ignore all data tokens until they receive a legal Wake token. Do not send a Wake token to devices that are awake, as they lose synchronization because the waveform can be resolved to neither a legal one nor zero. See Section **Synchronization Procedures** for the procedure to regain synchronization.

5.2 I/O Flags

The system is always the bus master; so before any I/O transaction, the system must send an 8-bit flag to the device to indicate the I/O operation to be subsequently performed, as shown in the table below.

Table 5-2. I/O Flags

Name	Value	Meaning
Sleep (low-power)	`0xCC`	The ATSHA204A goes into the low-power sleep mode and ignores all subsequent I/O transitions until the next Wake flag. The entire volatile state of the device is reset.
Idle	`0xBB`	The ATSHA204A goes into the idle state and ignores all subsequent I/O transitions until the next Wake flag. The contents of TempKey and RNG seed registers are retained.
Command	`0x77`	Write subsequent bytes to sequential addresses in the input command buffer.
Reserved	All Other Values	These flags should not be sent to the device.
Transmit	`0x88`	Communicates to the device to wait for a bus turnaround time and then start transmitting its response to the previously transmitted command block. When valid data is in the output buffer, the transmit flag may be repeatedly issued to the device to resend the buffer to the system.
Wake	See Interface	Wake the device from low-power mode and reset the watchdog counter.

5.2.1 Transmit Flag

The transmit flag is used to turn the bus around so that the ATSHA204A can send data back to the system. The bytes that the device returns to the system depend upon the current state of the device and may include either status, error code, or command results.

When the device is busy executing a command, it ignores the SDA pin and any flags that are sent by the system. See Section **Command Opcodes, Short Descriptions and Execution Times** for execution delays in the device for each command type. The system must observe these delays before trying to communicate with the device after sending a command.

© 2018 Microchip Technology Inc.

5.3 Synchronization

Because the communications protocol is half-duplex, there is the possibility that the system and the ATSHA204A can fall out of synchronization with each other. In order to speed recovery, the device implements a timeout that forces it to sleep under certain circumstances.

5.3.1 I/O Timeout

After a leading transition for any data token has been received, the ATSHA204A expects the remaining bits of the token to be properly received by the device within the $t_{TIMEOUT}$ interval. Failure to send enough bits or the transmission of an illegal token (a low pulse exceeding t_{ZLO}) causes the device to enter the sleep state after the $t_{TIMEOUT}$ interval.

The same timeout applies during the transmission of the command block. After the transmission of a legal command flag, the I/O timeout circuitry is enabled until the last expected data bit is received.

Note: The Timeout Counter is reset after every legal token and the total time to transmit the command may exceed the $t_{TIMEOUT}$ interval while the time between bits may not.

The I/O timeout circuitry is disabled when the device is busy executing a command.

5.3.2 Synchronization Procedures

If the device is not busy when the system sends a transmit flag, the device should respond within $t_{TURNAROUND}$. If t_{EXEC} time has not already passed, the device may be busy and the system should poll or wait until the maximum t_{EXEC} time has elapsed. If the device still does not respond to a second transmit flag within $t_{TURNAROUND}$, it may be out of synchronization. At this point, the system may take the following steps to reestablish communication:

1. Wait $t_{TIMEOUT.}$
2. Send the transmit flag.
3. If the device responds within $t_{TURNAROUND}$, then the system may proceed with more commands.
4. Send a Wake token.
5. Wait $t_{WHI.}$
6. Send the transmit flag.
7. The device should respond with a `0x11` status within $t_{TURNAROUND}$, at which time system may proceed with commands.

Any command results in the I/O buffer may be lost when the system and device lose synchronization.

5.4 Sharing the Interface

Multiple CryptoAuthentication devices may share the same interface, as follows:

1. System issues a Wake token (Section **Watchdog Failsafe**) to wake-up all devices.
2. The system issues the `Pause` command to put all but one of the devices into idle mode. Only the remaining device then sees any commands that the system sends. When the system has completed talking to the one active device, it sends an idle flag, which the idle devices ignore, but puts the single remaining active device into the idle mode. See Section **`Pause` Command** for more details.

Steps 1 and 2 are repeated for each device on the wire. If the system has completed communications with the final device, it should wake all the devices up and then put all the devices to sleep to reduce total power consumption.

© 2018 Microchip Technology Inc.

The device uses the selector byte within the configuration zone to determine which device stays awake. Only that device with a selector value that matches the input parameter of the `Pause` command stays awake. In order to facilitate late configuration of systems that use the multi-device sharing mode, the following three update capabilities for the selector byte are supported:

1. **Unlimited Updates**
   At any time, the `UpdateExtra` command can be executed to write the value in the selector field of the Configuration zone. To enable this mode, set the SelectorMode byte in the Configuration zone to zero.
2. **One-time Field Update**
   If the SelectorMode byte is set to a non-zero value and the selector byte is set to a zero value prior to locking the Configuration zone. Then, at any time after the Configuration zone is locked the `UpdateExtra` command can be used one time to set Selector to a non-zero value. The `UpdateExtra` command is not affected by the LockValue byte.
3. **Fixed Selector Value**
   The selector byte can never be modified after the Configuration zone is locked if both SelectorMode and Selector are set to non-zero values. The `UpdateExtra` command always returns an error code.

5.5 Transaction Example

Wake (Single-Wire)		
Host		Device
Wake	→	
Transmit	→	
	←	Data

Example (Single-Wire)		
Host		Device
Wake	→	
Transmit	→	
	←	Data
Command	→	
Data	→	
Transmit	→	
	←	Data
Idle/Sleep	→	

Table 5-3. Example (Single-Wire)

	Wake Token 0x00								Transmit 0x88								Count 0x04								Status 0x11							
Host									0	0	0	1	0	0	0	1																
Device																	0	0	1	0	0	0	0	0	1	0	0	0	1	0	0	0

	CRC-16 0x33								CRC-16 0x43								Command 0x77								Count							
Host																	1	1	1	0	1	1	1	0								
Device	1	1	0	0	1	1	0	0	1	1	0	0	0	0	1	0																
	Opcode								Param1								Param2								Param2							
Host																																
Device																																
	Data (0 – N)								Transmit 0x88								Count								Data (1 – N)							
Host									0	0	0	1	0	0	0	1																
Device																	X	X	X	X	X	X	X	X	X	X	X	X	X	X	X	X
	CRC-16								CRC-16								Idle															
Host																	1	1	0	1	1	1	0	1								
Device	X	X	X	X	X	X	X	X	X	X	X	X	X	X	X	X																

5.6 Wiring Configuration for Single-Wire Interface

The Single-Wire Interface allows the connection of the ATSHA204A to a Host using only a single SDA pin to transfer data in both directions. This interface does not use the SCL pin. The ATSHA204A does not require a bypass capacitor when wired in this configuration if the impedance of the power and ground signals back to the power supply is low. Microchip recommends a bypass capacitor always be used for the best reliability.

To prevent forward biasing the internal diode and drawing current across power planes in the system, the resistor pull-up on the SDA pin should either be connected to the same supply that is connected to the V_{CC} pin or to a lower voltage rail.

If the signal levels for SDA are different from the V_{CC} voltage, consult the parametric specifications section of this document to ensure that the signal levels are such that excessive leakage current is minimized when in sleep modes. This situation might occur if the ATSHA204A device is physically distant from the bus master device, or the supply voltage for the bus master is different from the supply voltage for the ATSHA204A.

© 2018 Microchip Technology Inc.

Figure 5-1. 3-wire Configuration for Single-Wire Interface

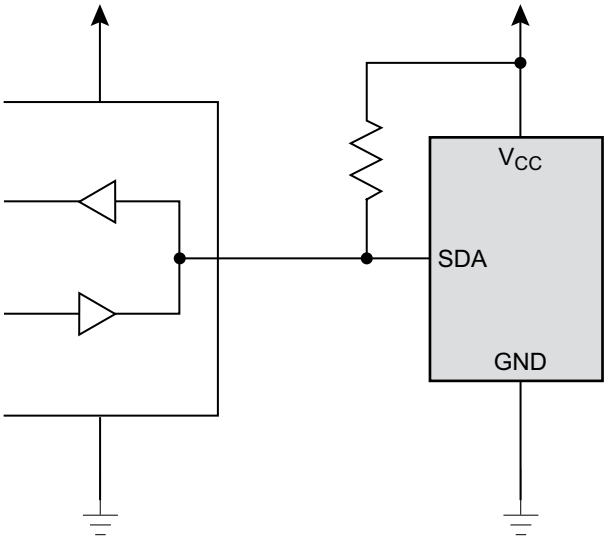

5.6.1 2-lead Configuration

There is an internal gated switch that is connected between the SDA and V_{CC} pins which permits the ATSHA204A to steal power from the SDA pin and store it on the bypass capacitor. In this case, the V_{CC} pin does not need to be connected to the Host's power supply. This configuration permits the board containing the ATSHA204A and a bypass capacitor to be connected to the Host's microprocessor using just two leads (that is, SDA and GND).

If the system supply voltage level is at least 3V, the pull-up resistor should be no greater than 1K and the capacitor no less than 0.03 µF. The device operates properly keeping V_{CC} at or above the specification level of 2V. Contact Microchip for other configuration information.

In a 2-lead configuration, the SDA pin must be driven high to V_{CC} using an active driver capable of supplying I_{CC} for the entire duration of any command execution and a totem pole driver should be used to send data to the device. The SDA line should only be reliant on the pull-up resistor during transmission of data from the ATSHA204A to the system

Figure 5-2. 2-lead Configuration for Single-Wire Interface

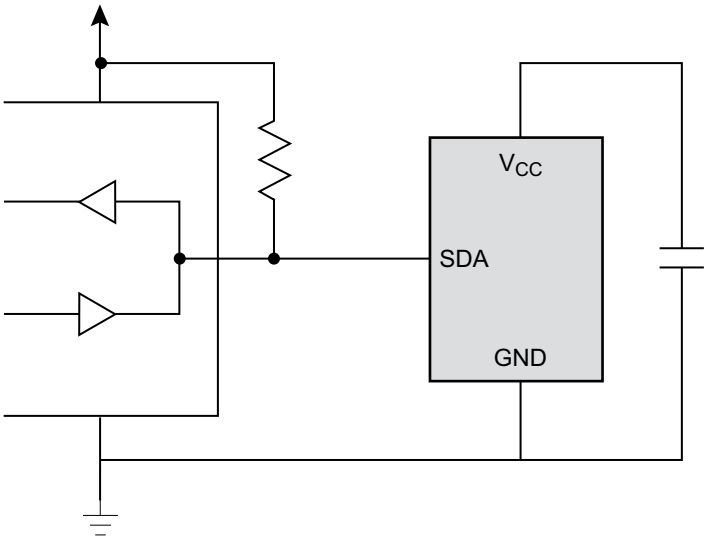

© 2018 Microchip Technology Inc.

6. I²C Interface

The I²C interface uses the SDA and SCL pins to indicate various I/O states to the ATSHA204A. This interface is designed to be compatible at the protocol level with other I²C devices operating up to 1 MHz.

The SDA pin must be pulled high with an external pull-up resistor, as the ATSHA204A includes only an open-drain driver on its output pin. The bus master may be either open-drain or totem pole and if the latter, then it should be tri-stated when the ATSHA204A is driving results on the bus. The SCL pin is an input and must be driven both high and low at all times by an external device or pull-up.

6.1 I/O Conditions

The ATSHA204A device responds to the following I/O conditions outlined in the **Device is Asleep** and **Device is Awake** sections.

6.1.1 Device is Asleep

When the device is asleep, it ignores all but the Wake condition.

- **Wake**: If SDA is held low for a period greater than t_{WLO}, the device exits low-power mode and, after a delay of t_{WHI}, is ready to receive I²C commands. The device ignores any levels or transitions on the SCL pin when the device is idle or asleep and during t_{WLO}. At some point during t_{WHI}, the SCL pin is enabled and the conditions listed in Section **Device is Awake**, are honored.

The Wake condition requires that either the system processor manually drives the SDA pin low for t_{WLO}, or that a data byte of `0x00` is transmitted at a clock rate sufficiently slow so that SDA is low for a minimum period of t_{WLO}. When the device is awake, the normal processor I²C hardware and/or software can be used for device communications up to and including the I/O sequence required to put the device back into low-power (for example sleep) mode.

When there are multiple ATSHA204A devices on the bus and the I²C interface is run at 133 KHz or slower, the transmission of certain data patterns (such as `0x00`) causes all the ATSHA204A devices on the bus to wake-up. Because subsequent device addresses transmitted along the bus can only match the desired devices, the unused devices remain inactive and do not cause any bus conflicts.

In I²C mode, the device ignores a wake sequence that is sent when the device is already awake.

6.1.2 Device is Awake

When the device is awake, it honors the conditions listed below:

- **Data Zero**: if SDA is low and stable while SCL goes from low to high to low, then a zero bit is being transferred on the bus. SDA can change while SCL is low.
- **Data One**: if SDA is high and stable while SCL goes from low to high to low, then a one bit is being transferred on the bus. SDA can change while SCL is low.

© 2018 Microchip Technology Inc.

Figure 6-1. Data Bit Transfer on I²C Interface

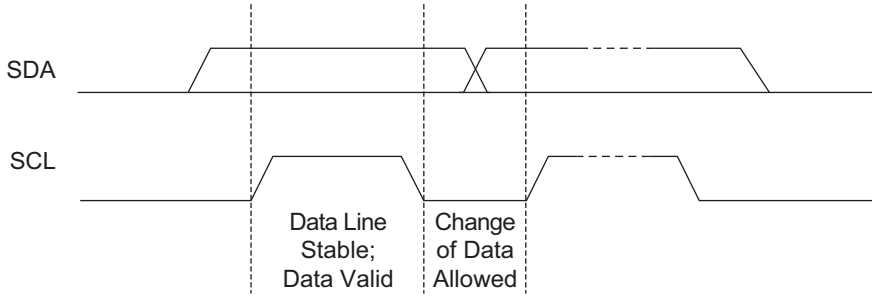

- **Start Condition**: a high-to-low transition of SDA with SCL high is a Start condition, which must precede all commands.
- **Stop Condition**: a low-to-high transition of SDA with SCL high is a Stop condition. After this condition is received by the device, the current I/O transaction ends. On input, if the device has sufficient bytes to execute a command, the device transitions to the busy state and begins execution. Microchip recommends that a Stop condition be sent after any packet is sent to the device although it may not always be required. The device starts when the correct number of bytes is received. In the case of an error on the bus, the device resets on the watchdog timer.

Figure 6-2. Start and Stop Conditions on I²C Interface

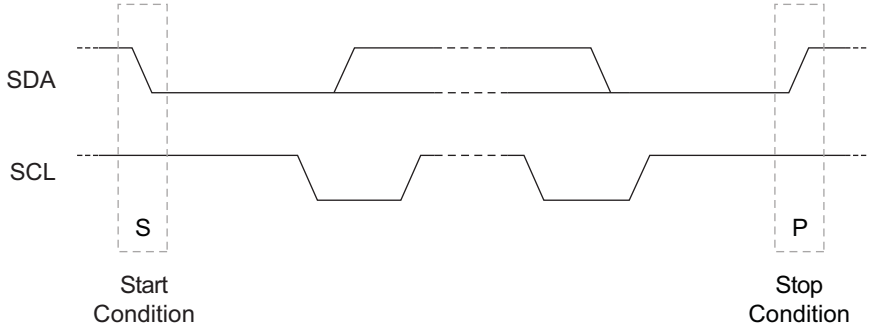

- **Acknowledge (ACK)**: on the ninth clock cycle after every address or data byte has been transferred, the receiver pulls the SDA pin low to acknowledge proper reception of the byte.
- **Not Acknowledge (NACK)**: alternatively, on the ninth clock cycle after every address or data byte has been transferred, the receiver can leave the SDA pin high to indicate that there was a problem with the reception of the byte or that this byte completes the block transfer.

© 2018 Microchip Technology Inc.

Figure 6-3. NACK and ACK Conditions on I²C Interface

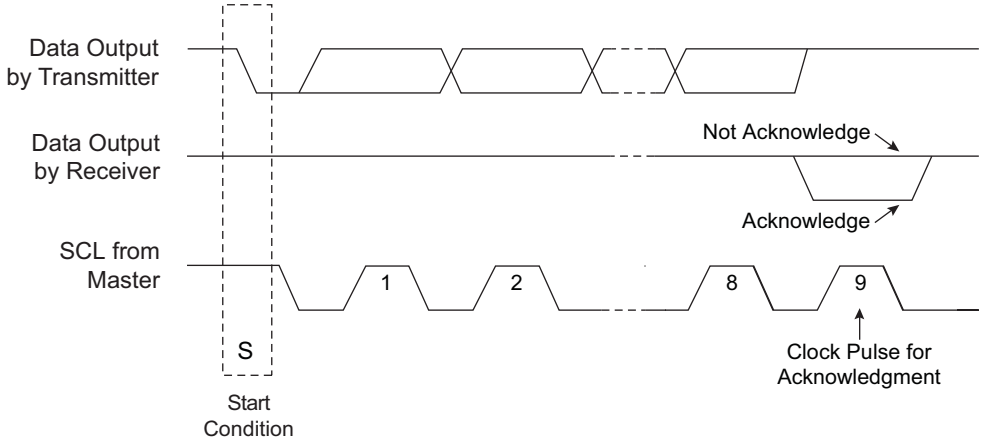

Multiple ATSHA204A devices can share the same I²C interface if the I2C_Address byte is programmed differently for each device on the bus. Because six of the bits of the device address are programmable, the ATSHA204A can also share the I²C interface with any standard I²C device, including any serial EEPROM. Bit 3 (also known as TTL Enable) must be programmed according to the input thresholds desired and it is fixed in a particular application.

6.2 I²C Transmission to the ATSHA204A Device

The transmission of data from the system to the ATSHA204A is summarized in the figure below. The order of transmission is as follows:

1. Start Condition
2. Device Address Byte
3. Word Address Byte
4. Optional Data Bytes (1 through N)
5. Stop Condition

Figure 6-4. Normal I²C Transmission to an ATSHA204A

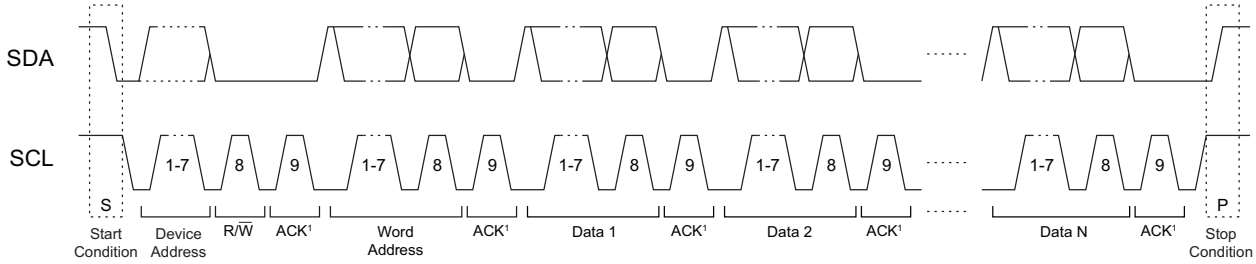

Note: SDA is driven low by the ATSHA204A during the ACK periods

The following table labels the bytes of the I/O transaction. The I²C name column provides the names of the bytes as they are described in the AT24C16 Datasheet.

Table 6-1. I²C Transmission to the ATSHA204A

ATSHA204A	I²C Name	Direction	Description
Device Address	Device Address	To Slave	This byte selects a particular device on the I²C interface. The ATSHA204A is selected if bits 1 through 7 of this byte match bits 1 thru

ATSHA204A	I²C Name	Direction	Description
			7 of the I2C_Address byte in the Configuration zone. Bit 0 of this byte is the standard I²C R/W bit and should be zero to indicate a Write operation (the bytes following the device address travel from the master to the slave).
Data	$Data_{1,N}$	To Slave	The input block.

Because the device treats the command input buffer as a FIFO, the input block can be sent to the device in one or many I²C command blocks. The first byte sent to the device is the count, so after the device receives that number of bytes, it ignores any subsequently received bytes until execution is finished.

The system must send a Stop condition after the last command byte to ensure that the ATSHA204A starts the computation of the command. Failure to send a Stop condition can eventually result in a loss of synchronization (See Section **I²C Synchronization** for recovery procedures).

6.2.1 Word Address Values

During an I²C write packet, the ATSHA204A interprets the second byte sent as the word address, which indicates the packet function, as described in the table below.

Table 6-2. Word Address Values

Name	Value	Description
Reset	`0x00`	Reset the address counter. The next read or write transaction starts with the beginning of the I/O buffer.
Sleep (Low Power)	`0x01`	The ATSHA204A goes into the low-power sleep mode and ignores all subsequent I/O transitions until the next Wake flag. The entire volatile state of the device is reset.
Idle	`0x02`	The ATSHA204A goes into the idle state and ignores all subsequent I/O transitions until the next Wake flag. The contents of TempKey and RNG Seed registers are retained.
Command	`0x03`	Write subsequent bytes to sequential addresses in the input command buffer that follow previous writes. This is the normal operation.
Reserved	`0x04 - 0xFF`	These addresses should not be sent to the device.

6.2.2 Command Completion Polling

After a complete command has been sent to the ATSHA204A, the device will be busy until the command computation completes. The system has two options for this delay:

- **Polling**
  The system should wait t_{EXEC} (typical) and then send a read sequence (See Section **I²C Transmission from the ATSHA204A Device**). If the device NACKs the device address, then it is still busy. The system may delay for some time or immediately send another read sequence, again looping on NACK. After a total delay of t_{EXEC} (max), the device will have completed the computation and can return the results.
- **Single Delay**
  The system should wait t_{EXEC} (max), after which the device will have completed execution and the result can be read from the device using a normal read sequence.

© 2018 Microchip Technology Inc.

6.3 I²C Transmission from the ATSHA204A Device

When the ATSHA204A is awake and not busy, the bus master can retrieve the current buffer contents from the device using an I²C read. If valid command results are available, the size of the block returned is determined by the particular command that has been run (See Section **Security Commands**); otherwise, the size of the block (and the first byte returned) is always four: count, status/error and 2-byte CRC. The bus timing is shown in Figure **I²C Synchronous Data Timing**.

Table 6-3. I²C transmission from ATSHA204A

Name	I²C Name	Direction	Description
Device Address	Device Address	To Slave	This byte selects a particular device on the I²C interface and the ATSHA204A is selected if bits 1 through 7 of this byte match bits 1 through 7 of the I2C_Address byte in the Configuration zone. Bit `0` of this byte is the standard I²C R/W pin and should be one to indicate that the bytes following the device address travel from the slave to the master (read).
Data	$Data_{1,N}$	To Master	The output block, consisting of the count and status/error byte or the output packet followed by the 2-byte CRC per Section 8.2.

The status, error, or command outputs can be read repeatedly by the master. Each time a `Read` command is sent to the ATSHA204A along the I²C interface, the device transmits the next sequential byte in the output buffer. See the following section for details on how the device handles the address counter.

If the ATSHA204A is busy, idle, or asleep, it will NACK the device address on a read sequence. If a partial command has been sent to the device, then it will NACK the device address, but float the bus during the data intervals.

6.4 Address Counter

Writes to and/or reads from the ATSHA204A I/O buffer over the I²C interface are treated as if the device were a FIFO. Either the I²C byte or block write/read protocols can be used. The number of bytes transferred with each block sequence does not affect the operation of the device.

The first byte transmitted to the device is treated as the count byte. Any attempt to send more than this number of bytes or any attempts to write beyond the end of the I/O buffer (84 bytes) causes the ATSHA204A to NACK those bytes.

After the Host writes a single command byte to the input buffer, device `Read` commands from the Host are prohibited until after the device completes command execution. Attempts to read from the device prior to the last command byte being sent results in an ACK of the device address but all ones (`0xFF`) on the bus. If the master attempts to send a read byte to the device during command execution, the device will NACK the device address.

Data may be read from the device under the following three conditions:

- Upon power-up, the single byte, `0x11` (See Section **Command Opcodes, Short Descriptions and Execution Times**), can be read inside a four byte block.
- If a complete block has been received by the device, but there are any errors in parsing or executing the command, a single byte of error code is available, also inside a four byte block.
- Upon completion of command execution, from 1 to 32 bytes of command result are available to be read inside a block of 4 to 35 bytes.

© 2018 Microchip Technology Inc.

Any attempt to read beyond the end of the valid output buffer returns `0xFF` to the system and the address counter does not wrap around to the beginning of the buffer.

There may be situations where the system may wish to re-read the output buffer, for example when the CRC check reveals an error. In this case, the master should send a two-byte sequence to the ATSHA204A consisting of the correct device address and a word address of `0x00` (Reset, per Table Table 6-2), followed by a Stop condition. This causes the address counter to be reset to zero and permits the data to be re-written (re-read) to (from) the device. This address reset sequence does not prohibit subsequent read operations if data were available for reading in the I/O buffer prior to the sequence execution.

After one or more Read operations to retrieve the results of a command execution, the first Write operation resets the address counter to the beginning of the I/O buffer.

6.5 I²C Synchronization

It is possible for the system to lose synchronization with the I/O port on the ATSHA204A, for example due a system reset, I/O noise, or some other condition. Under this circumstance, the ATSHA204A may not respond as expected, may be asleep, or may be transmitting data during an interval when the system is expecting to send data. Any command results in the I/O buffer may be lost when the system and device lose synchronization. To re-synchronize, the following procedure should be followed:

1. To ensure an I/O channel reset, the system should send the standard I²C software reset sequence, as follows:
   - A Start condition.
   - Nine cycles of SCL with SDA held high.
   - Another Start condition.
   - A Stop condition.

   It should then be possible to send a read sequence and if synchronization has completed properly, the ATSHA204A will ACK the device address. The device either returns data or leaves the bus floating (which the system interprets as a data value of `0xFF`) during the data periods.

   If the device does ACK the device address, the system should reset the internal address counter to force the ATSHA204A to ignore any partial input command that may have been sent. This can be accomplished by sending a write sequence to word address `0x00` (Reset), followed by a Stop condition.
2. If the device does not respond to the device address with an ACK, then it may be asleep. In this case, the system should send a complete wake token and wait t_{WHI} after the rising edge. The system may then send another read sequence and, if synchronization has completed, the device will ACK the device address.
3. If the device still does not respond to the device address with an ACK, then it may be busy executing a command. The system should wait the longest t_{EXEC} (max) and then send the read sequence, which is acknowledged by the device.

© 2018 Microchip Technology Inc.

6.6 Transaction Example

Table 6-4. Wake (I^2C)

Wake (I^2C)		
Host		Device
Start	→	
Wake	→	
Stop	→	
Start	→	
Slave Address / R	→	
	←	Data
Stop	→	

Table 6-5. Transaction Examples

Example (I^2C)		
Host	→	Device
Start	→	
Wake	→	
Stop	→	
Start	→	
Slave Address / R	→	
	←	Data
Stop	→	
Start	→	
Slave Address / W	→	
Command	→	
Data	→	
Stop	→	
Start	→	
Slave Address / R	→	
	←	Data
Stop	→	
Start	→	
Slave Address / W	→	
Idle / Sleep	→	
Stop	→	

© 2018 Microchip Technology Inc.

7. Electrical Characteristics

7.1 Absolute Maximum Ratings

Operating Temperature	−40°C to +85°C
Storage Temperature	−65°C to + 150°C
Maximum Operating Voltage	6.0V
DC Output Current	5.0 mA
Voltage on any pin	0.5V to (V_{CC} + 0.5V)
ESD Ratings:	
Human Body Model(HBM) ESD	>4kV
Charge Device Model(CDM) ESD	>1kV

Note: Stresses beyond those listed under “Absolute Maximum Ratings” may cause permanent damage to the device. This is a stress rating only and functional operation of the device at these or any other condition beyond those indicated in the operational sections of this specification is not implied. Exposure to absolute maximum rating conditions for extended periods may affect device reliability.

7.2 Reliability

The ATSHA204A is fabricated with the high reliability of a Microchip CMOS EEPROM manufacturing technology.

Table 7-1. EEPROM Reliability

Parameter	Min	Typical	Max	Units
Write Endurance (each byte at 25°C)	100,000			Write Cycles
Data Retention (at 55°C)	10			Years
Data Retention (at 35°C)	30	50		Years
Read Endurance	Unlimited			Read Cycles

7.3 AC Parameters — All I/O Interfaces

Figure 7-1. AC Timing Diagram — All I/O Interfaces

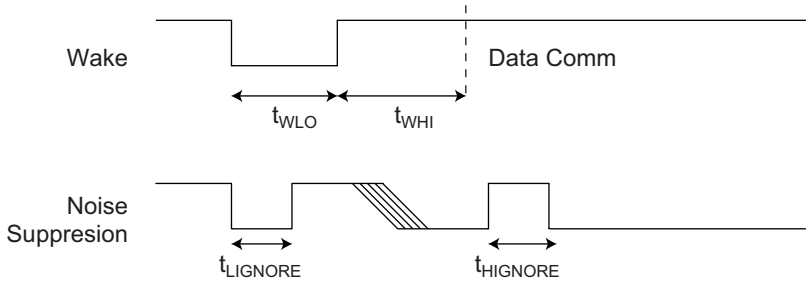

Table 7-2. AC Parameters — All I/O Interfaces

Parameter	Symbol	Direction	Min	Typ	Max	Unit	Notes
Wake Low Duration	t_{WLO}	To Crypto Authentication	60		—	µs	SDA can be stable in either high or low levels during extended sleep intervals.
Power-Up Delay	t_{PU}	To Crypto Authentication	100[(1)]			µs	Minimum time between V_{CC} > V_{CC} min prior to measurement of t_{WLO}.
Wake High Delay to Data Comm.	t_{WHI}	To Crypto Authentication	2.5			ms	SDA should be stable high for this entire duration.
High Side Glitch Filter at Active	$t_{HIGNORE_A}$	To Crypto Authentication	45			ns	Pulses shorter than this in width are ignored by the device, regardless of its state when active.
Low Side Glitch Filter at Active	$t_{LIGNORE_A}$	To Crypto Authentication	45			ns	Pulses shorter than this in width are ignored by the device, regardless of its state when active.
High Side Glitch Filter at Sleep	$t_{HIGNORE_S}$	To Crypto Authentication	15			µs	Pulses shorter than this in width are ignored by the device when in sleep mode.
Low Side Glitch Filter at Sleep	$t_{LIGNORE_S}$	To Crypto Authentication	15			µs	Pulses shorter than this in width are ignored by the device when in sleep mode.
Watchdog Reset	$t_{WATCHDOG}$	To Crypto Authentication	0.7[(1)]	1.3	1.7	s	Max. time from wake until device is forced into sleep mode (See Section **Watchdog Failsafe**).

Note:

1. These parameters are guaranteed through characterization, but not tested.

7.3.1 AC Parameters — Single-Wire Interface

Figure 7-2. AC Timing Diagram — Single-Wire Interface

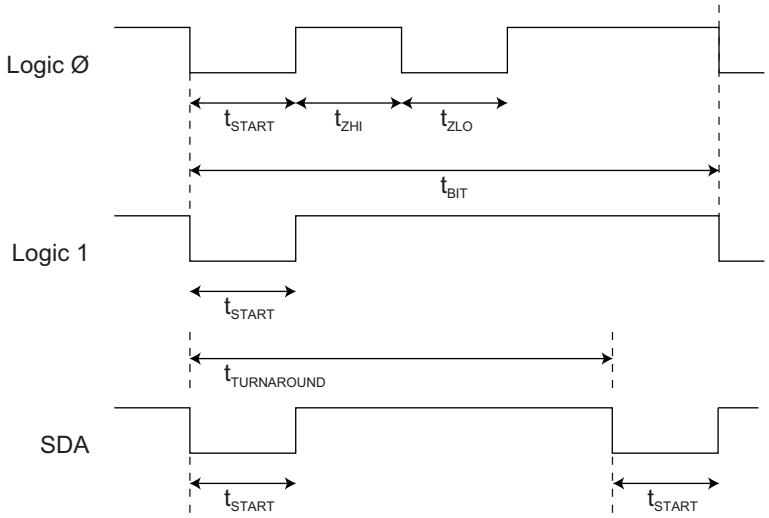

Table 7-3. AC Parameters — Single-Wire Interface

Unless otherwise specified, applicable from T_A = −40°C to +85°C, V_{CC} = +2.0V to +5.5V, CL =100 pF.

Parameter	Symbol	Direction	Min	Typ	Max	Unit	Notes
Start Pulse Duration(1)	t_{START}	To Crypto Authentication	4.10	4.34	4.56	µs	
		From Crypto Authentication	4.60	6.00	8.60	µs	
Zero Transmission High Pulse(1)	t_{ZHI}	To Crypto Authentication	4.10	4.34	4.56	µs	
		From Crypto Authentication	4.60	6.00	8.60	µs	
Zero Transmission Low Pulse(1)	t_{ZLO}	To Crypto Authentication	4.10	4.34	4.56	µs	
		From Crypto Authentication	4.60	6.00	8.60	µs	
Bit Time(1)	t_{BIT}	To Crypto Authentication	37	39	—	µs	If the bit time exceeds $t_{TIMEOUT}$, then the ATSHA204A may enter the sleep state. See Section **I/O Timeout** for specific details.
		From Crypto Authentication	41	54	78	µs	
Turnaround Delay	$t_{TURNAROUND}$	From Crypto Authentication	64	80	131	µs	The ATSHA204A initiates the first low-going transition after this time interval following the start of the last bit (t_{BIT}) of the Transmit flag.

Parameter	Symbol	Direction	Min	Typ	Max	Unit	Notes
		To Crypto Authentication	93			µs	After the ATSHA204A transmits the last bit of a block, the system must wait this interval before sending the first bit of a flag.
I/O Timeout	$t_{TIMEOUT}$	To Crypto Authentication	45	65	85	ms	The ATSHA204A may transition to the sleep state if the bus is inactive longer than this duration. See Section **I/O Timeout** for specific details.

Note:

1. t_{START}, t_{ZLO}, t_{ZHI} and t_{BIT} are designed to be compatible with a standard UART running at 230.4 kBaud for both transmit and receive. The UART should be set to seven data bits, no parity and one stop bit.

7.3.2 AC Parameters — I²C Interface

Figure 7-3. I²C Synchronous Data Timing

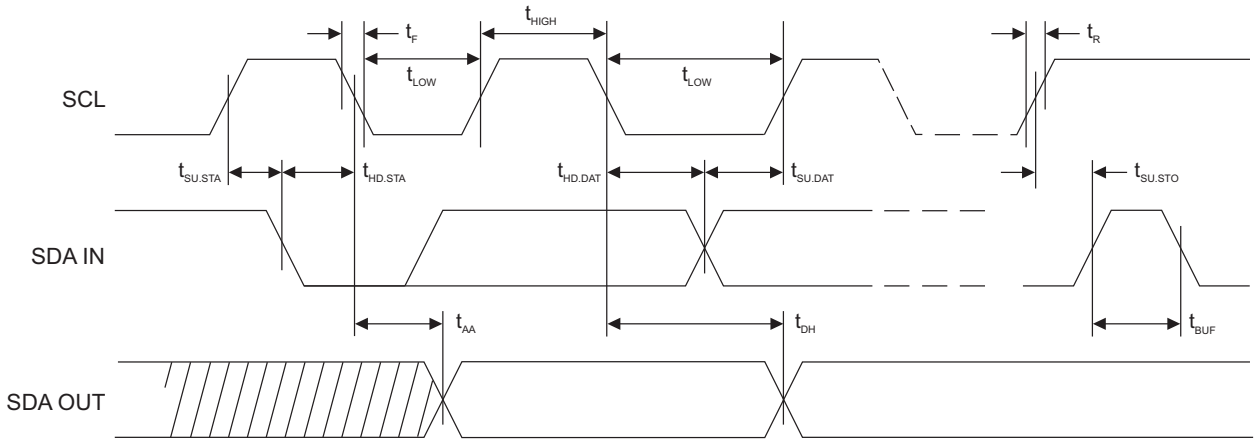

Table 7-4. AC Characteristics of the I²C Interface

Unless otherwise specified, applicable over recommended operating range from T_A = −40°C to + 85°C, V_{CC} = +2.0V to +5.5V, CL = 1 TTL gate and 100 pF.

Symbol	Parameter	Min	Max	Units
f_{SCK}	SCK Clock Frequency		1000	kHz
	SCK Clock Duty Cycle	30	70	%
t_{HIGH}	SCK High Time	400		ns
t_{LOW}	SCK Low Time	400		ns
$t_{SU.STA}$	Start Setup Time	250		ns
$t_{HD.STA}$	Start Hold Time	250		ns
$t_{SU.STO}$	Stop Setup Time	250		ns

© 2018 Microchip Technology Inc.

Symbol	Parameter	Min	Max	Units
$t_{SU.DAT}$	Data in Setup Time	100		ns
$t_{HD.DAT}$	Data in Hold Time	0		ns
t_R	Input rise time(1)		300	ns
t_F	Input Fall Time(1)		100	ns
t_{AA}	Clock Low to Data Out Valid	50	550	ns
t_{DH}	Data Out Hold Time	50		ns
t_{BUF}	Time bus must be free before a new transmission can start.(1)	500		ns

Note:

1. Values are based on characterization, but are not tested.
   AC measurement conditions:
   - RL (connects between SDA and V_{CC}): 1.2 kΩ (for V_{CC} +2.0V to +5.0V)
   - Input pulse voltages: $0.3V_{CC}$ to $0.7V_{CC}$
   - Input rise and fall times: ≤ 50 ns
   - Input and output timing reference voltage: $0.5V_{CC}$

7.4 DC Parameters — All I/O Interfaces

Table 7-5. DC Parameters on All I/O Interfaces

Parameter	Symbol	Min	Typ	Max	Unit	Notes
Ambient Operating Temperature	T_A	-40		85	°C	
Power Supply Voltage	V_{CC}	2.0		5.5	V	
Active Power Supply Current	I_{CC}		500		µA	0°C → +70°C, V_{CC} = 3.3V.
			—	2	mA	-40°C → +85°C, V_{CC} = 5.5V.
Idle Power Supply Current	I IDLE		200		µA	When device is in idle mode, V_{CC} = 3.3V, V_{SDA} and V_{SCL} < 0.3V or > > V_{CC}-0.3.
Sleep Current	I SLEEP		30	150	nA	When device is in sleep mode, V_{CC} ≤ 3.6V, V_{SDA} and V_{SCL} < 0.3V or > V_{CC}-0.3, T_A ≤ 55°C
				2	µA	When device is in sleep mode; all operating conditions.
Output Low Voltage	V_{OL}			0.4	V	When device is in active mode, V_{CC} = 2.5 – 5.5V.
Output Low Current	I_{OL}			4	mA	When device is in active mode, V_{CC} = 2.5 – 5.5V, V_{OL} = 0.4V.

© 2018 Microchip Technology Inc.

7.4.1 V_{IH} and V_{IL} Specifications

The input voltage thresholds when in sleep or idle mode are dependent on the V_{CC} level as shown in the graph in V_{IH} and V_{IL} When in Sleep or Idle Mode.

Figure 7-4. V_{IH} and V_{IL} When in Sleep or Idle Mode

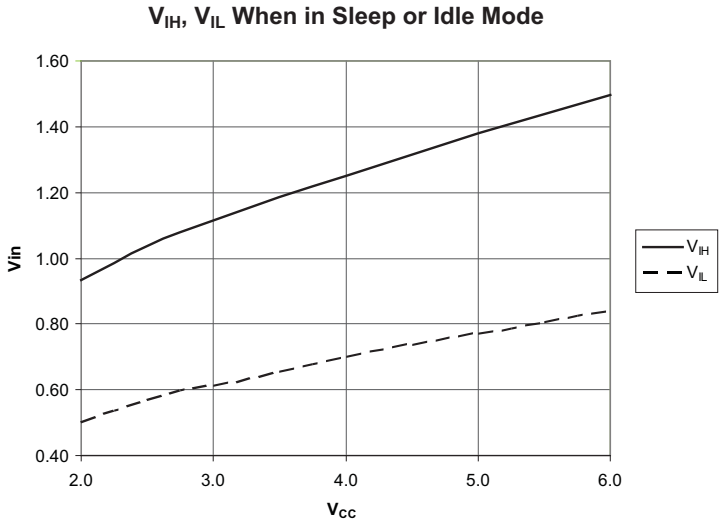

When the device is active (for instance, not in sleep or idle mode), the input voltage thresholds are different, depending on the state of TTLenable (bit 3) within the I2C_Address byte stored in the Configuration zone of the EEPROM. When a common voltage is used for the ATSHA204A V_{CC} pin and the input pull-up resistor, then this bit should be set to a one, which permits the input thresholds to track the supply as shown in **Figure 7-5**.

If the voltage supplied to the V_{CC} pin of the ATSHA204A is different from the system voltage to which the input pull-up resistor is connected, then the system designer may chose to set TTLenable to zero. This enables a fixed input threshold and the input signal must meet the threshold levels as shown in **Table 7-6**.

Figure 7-5. V_{IH} and V_{IL} When TTLenable = 1 on All I/O Interfaces

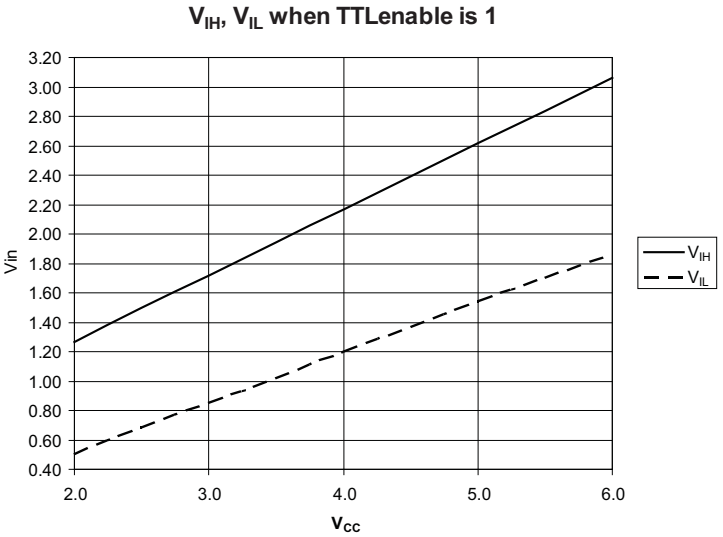

Table 7-6. V_{IL} and V_{IH} When TTLenable = 0 on All I/O Interfaces

Parameter	Symbol	Min	Typ	Max	Unit	Notes
Input Low Voltage	V_{IL}	GND - 0.5		0.5	V	When device is active and TTLenable bit in configuration memory is zero; otherwise, see above.
Input High Voltage	V_{IH}	1.5		V_{CC} + 0.5	V	When device is active and TTLenable bit in configuration memory is zero; otherwise, see above.

© 2018 Microchip Technology Inc.

8. Security Commands

8.1 I/O Blocks

Regardless of the I/O protocol being used (for instance Single-Wire or I^2C), commands are sent to the device and responses received from the device, within a block that is constructed in the following way:

Table 8-1. Blocks

Byte	Name	Meaning
0	Count	Packet size. Includes Count, Data and Checksum.
1 to N-2	Data	If device input; commands and parameters. If device output; response from the device based on the Command being called.
N-1 to N	Checksum	CRC-16. The CRC polynomial is 0x8005.

The ATSHA204A is designed in such a way that the count value in the input block should be consistent with the size requirements specified in the command parameters. If the count value is inconsistent with the command opcode and/or parameters within the packet, then the ATSHA204A responds in different ways, depending upon the specific command. Either the response includes an error indication or some input bytes are silently ignored.

8.1.1 Status/Error Codes

The device does not have a dedicated status register, so the output FIFO is shared among status, error and command results. All output from the device is returned to the system as complete blocks.

After the device receives the first byte of an input command block, the system cannot read anything from the device until the system has sent all the bytes to the device.

After wake and after execution of a command, there can be error, status, or result bytes in the device's output register that can be retrieved by the system. When the length of that block is four bytes, the codes returned are as detailed in the following table. Some commands return more than four bytes when they execute successfully. The resulting packet description is listed in the command section below.

CRC errors are always returned before any other type of error. They indicate that some sort of I/O error occurred and that the command may be resent to the device. If a command includes both parse and execution errors, then there is no particular precedence enforced, so an execution error may occur before a parse error and/or the reverse may occur.

Table 8-2. Status/Error Codes in 4-byte Blocks

State Description	Error/ Status	Description
Successful Command Execution	`0x00`	Command executed successfully.
Checkmac Miscompare	`0x01`	The `CheckMac` command was properly sent to the device, but the input Client response did not match the expected value.
Parse Error	`0x03`	Command was properly received, but the length, command opcode, or parameters are illegal, regardless of the state (volatile and/or EEPROM configuration) of the ATSHA204A.

© 2018 Microchip Technology Inc.

State Description	Error/ Status	Description
		Changes in the value of the command bits must be made before it is re-attempted.
Execution Error	`0x0F`	Command was properly received, but could not be executed by the device in its current state. Changes in the device state or the value of the command bits must be made before it is re-attempted.
After Wake, Prior to First Command	`0x11`	Indication that the ATSHA204A has received a proper Wake token.
CRC or other Communications Error	`0xFF`	Command was not properly received by the ATSHA204A and should be re-transmitted by the I/O driver in the system. No attempt was made to parse or execute the command.

8.2 Sleep Sequence

Upon completion of system use of the ATSHA204A, the system should issue a sleep sequence to put the device into low-power mode. Using the I^2C interface, this sequence consists of the proper device address followed by the sleep flag followed by a Stop condition. This transition to the low-power state causes a complete reset of the device's internal command engine and input/output buffer. It can be sent to the device at any time when it is awake and not busy.

8.3 Idle Sequence

If the total sequence of required commands exceeds $t_{WATCHDOG}$, then the device automatically goes to sleep and loses any information stored in the volatile registers. This action can be prevented by putting the device into the idle state prior to completion of the watchdog interval. When the device receives the Wake token, it then restarts the watchdog timer and execution can be continued.

Using the I^2C interface, this idle sequence consists of the proper device address followed by the value of `0x02` as the word address followed by a Stop condition. It can be sent to the device at any time when it is awake and not busy.

If TempKey was created as a result of the copy mode of the `CheckMac` command, it will not be retained when the part goes into an idle state.

8.4 Watchdog Failsafe

A watchdog counter starts within the device after the ATSHA204A receives a Wake token. After $t_{WATCHDOG}$, the device enters sleep mode regardless of whether some I/O transmission or command execution is in progress. There is no way to reset the counter other than to put the device into sleep or idle mode and then wake it up again.

The watchdog timer is implemented as a failsafe mechanism so that no matter what happens on either the system side or inside the device, including any I/O synchronization issue, power consumption falls to the ultra-low sleep level automatically.

The device resets the values stored in the SRAM and internal status registers when it transitions to the sleep state, however if the device is explicitly put into the idle mode through the appropriate I/O

© 2018 Microchip Technology Inc.

sequence, the device retains the contents of the two SRAM registers (for example TempKey and RNG seed).

Normally, all command sequences must complete within $t_{WATCHDOG}$ if they require a state that is stored in the SRAM registers. The system software can use this idle mode mechanism between commands to implement a longer command sequence than can be completed during a single watchdog interval.

8.5 Command Sequence

8.5.1 Command Packets

The command packet is broken down as shown in the following table:

Table 8-3. Command Packets

Byte #	Name	Meaning
0	Command	Command Flag (see **Word Address Values** for the I²C mode of operation and **I/O Flags** for Single Wire Interface mode). Not included in Count or CRC field.
1	Count	Packet size: Includes Count, Opcode, Param1, Param2, Data and CRC. Does not include Command Flag.
2	Opcode	ATSHA204A operation being called.
3	Param1	First Parameter. One byte always present.
4 – 5	Param2	Second Parameter. Two bytes always present.
	Data	Optional Data based on Command being called.
N-1to N	Checksum	CRC-16. The CRC polynomial is 0x8005. Includes Count, Opcode, Param1, Param2 and Data. Does not include Command Flag.

After the ATSHA204A receives all the bytes in a block, the device transitions to the busy state and attempts to execute the command. Neither status nor results can be read from the device when it is busy. During this time, the device's I/O interface ignores all SDA transitions regardless of the I/O interface selected. The command execution delays are listed in Section **Read Operations within the Data Zone**.

If an insufficient number of bytes are sent to the device when it is in one-wire mode, the device automatically transitions to the low-power sleep state after the $t_{TIMEOUT}$ interval. In I²C mode, the device continues to wait for the remaining bytes until the watchdog timer limit, $t_{WATCHDOG}$, is reached or a Start/Stop condition is received by the device.

In the individual command descriptions in Table 8-8 through Table 8-41, the size column describes the number of bytes in the parameter documented in each particular row. If the input block size for a particular command is incorrect, then the device responds differently depending upon the command. It may not return an error indication in all circumstances (see Section **Status/Error Codes**).

8.5.2 Command Opcodes, Short Descriptions and Execution Times

During parsing of the parameters and the subsequent execution of a properly received command, the device is busy and can not respond to transitions on the pins. The interval during which the device is busy varies depending upon the command and its parameter values, the state of the device, the environmental conditions and other factors according to the following table.

© 2018 Microchip Technology Inc.

In most but not all cases, failing commands return relatively quickly, often well before the typical execution time.

Table 8-4. Command Opcodes, Short Descriptions and Execution Times

Command	Opcode	Description	Typ. Exec. Time(1), ms	Max. Exec. Time(2), ms
DeriveKey	0x1C	Derive a target key value from the target or parent key.	14	62
DevRev	0x30	Return device revision information.	0.4	2
GenDig	0x15	Generate a data protection digest from a random or input seed and a key.	11	43
HMAC	0x11	Calculate response from key and other internal data using HMAC/SHA-256.	27	69
CheckMac	0x28	Verify a MAC calculated on another Microchip CryptoAuthentication device.	12	38
Lock	0x17	Prevent further modifications to a zone of the device.	5	24
MAC	0x08	Calculate response from key and other internal data using SHA-256.	12	35
Nonce	0x16	Generate a 32-byte random number and an internally stored nonce.	22	60
Pause	0x01	Selectively put just one device on a shared bus into the idle state.	0.4	2
Random	0x1B	Generate a random number.	11	50
Read	0x02	Read four bytes from the device, with or without authentication and encryption.	0.4	4
SHA	0x47	Calculate a SHA256 digest for any system purpose.	11	22
UpdateExtra	0x20	Update bytes 84 or 85 within the Configuration zone after the Configuration zone is locked.	8	12
Write	0x12	Write 4 or 32 bytes to the device, with or without authentication and encryption.	4	42

Note:

1. Typical execution times are representative of the duration to execute the command assuming no error conditions, fastest mode setting, no optional internal actions such as limited use keys and favorable environmental conditions. For best performance, delay for this interval and then start polling to determine actual command completion.
2. Maximum execution times are representative of the longest duration of a successful command execution with all mode and internal actions enabled under extended statistical and environmental conditions. Execution time may extend beyond these values in extreme situations.

8.5.3 Zone Encoding

The value in Param1 for both the `Read` command and the `Write` command controls which zone the command accesses. See Section **Configuration Zone Locking** to obtain more information on what controls the “locked” and “unlocked” states for each zone. All other zone values are reserved and should not be used.

Table 8-5. Zone Encoding (Param1)

Zone Name	Param1 Value	Size	Read	Write
Config	0	704 bits 88 bytes 3 slots	Always available.	Partially, when unlocked. Never when locked. Never encrypted.
OTP	1	512 bits 64 bytes 2 slots	Never when unlocked. Always when locked, except in legacy mode. See Section **One Time Programmable (OTP) Zone**.	Not allowed when LockConfig is unlocked. All writeable when LockConfig is locked and LockValue is unlocked. Controlled by OTPmode when LockValue is locked. See Section **One Time Programmable (OTP) Zone**.
Data	2	4096 bits 512 bytes 16 slots	Never when unlocked; otherwise, controlled by IsSecret and EncryptRead.	Not allowed when LockConfig is unlocked. All writeable when LockConfig is locked and LockValue is unlocked. Controlled by WriteConfig when LockValue is locked. See Section **Device Locking**.

8.5.4 Address Encoding

Param2 includes a single address that indicates the memory to be accessed. All Reads and Writes are in units of Words (4-byte). The most-significant byte of a legal ATSHA204A address is always zero. All unused address bits should always be set to zero. The least-significant bits in the address describe the offset to the first word to be accessed within the Block/Slot, while the upper bits specify the Slot number per the table below:

Table 8-6. Address Encoding (Param2)

	Byte 0 (First Byte on the Bus)								Byte 1							
Zone	7	6	5	4	3	2	1	0	7	6	5	4	3	2	1	0
Data	0	Block				Offset			0	0	0	0	0	0	0	0
Config	0	0	0	Block		Offset			0	0	0	0	0	0	0	0
OTP	0	0	0	0	Block	Offset			0	0	0	0	0	0	0	0

Within each zone, there are various access restrictions per the table below:

Table 8-7. Legal Block/slot Values

Zone	Legal Block/Slot (Inclusive)	Notes
Data	0 – 15	All offsets in all slots available for both read and write. 4-byte access permitted on a particular slot only if SlotConfig.IsSecret is zero.
Config	0 – 2	Words above 16 (block 2, offset 6) can never be read.

Zone	Legal Block/Slot (Inclusive)	Notes
		Words above 10 (block 2, offset 0) read and write must be in Word (4-byte) mode. Words below 04 (block 0, offset 4) and above 15 (block 2, offset 5) can never be written.
OTP	0 – 1	When OTPmode is read-only, all offsets in both blocks are available to use with 4-byte and 32-byte reads. If OTPmode is consumption, then writes are also permitted to all offsets. See Section **One Time Programmable (OTP) Zone** if OTPmode is Legacy.

8.5.5 `CheckMac` Command

The `CheckMac` command calculates a MAC response that had been generated on a CryptoAuthentication device and compares the MAC response with some input value. It returns a Boolean result to indicate the success or failure of the comparison.

Prior to running this command, the `Nonce` and/or `GenDig` commands may have been optionally run to create and load a key or nonce value in TempKey. The mode parameter determines the source of the “key” (the first 32-bytes of the SHA message) and “challenge/nonce” (the second-32 bytes of the SHA message).

Mode<2> controls the requirement for a random nonce if TempKey is part of the computed value. If Mode<2> = 1, then TempKey must be generated using `Nonce(Fixed)`; if Mode<2> = 0, then TempKey must be generated using `Nonce(Random)`.

Setting Mode<2> to one may enable replay attacks in some situations.

If the comparison matches, then the target slot value may be copied into TempKey. If SlotID is even, then the target slot is SlotD+1, or else the target slot is SlotID. For the copy to take place, the following conditions must be true. If they are not all true, then the ATSHA204A returns the comparison result but doesn't copy the key value.

1. The mode parameter to `CheckMac` must have a value of `0x01` or `0x05`.
2. SlotConfig.ReadKey for the target key must be zero.
3. The bit in Config.CheckMacSource corresponding to the key slots must have a value that matches Mode<2>.

Table 8-8. Input parameters

	Name	Size	Notes
Opcode	CheckMac	1	0x28
Param1	Mode	1	**Bits 7-6:** Must be zero. **Bit 5:** 8-bytes of SHA message. 0: zeros 1: OTP zone **Bit 4-3:** Must be zero. **Bit 2:** If TempKey is used, this bit must match the value of TempKey.SourceFlag. **Bit 1:** Source of the first 32-bytes of the SHA message.

	Name	Size	Notes
			0: Slot<SlotID> 1: TempKey Source of the second 32-bytes of the SHA message. **Bit 0:** 0: ClientChal parameter 1: TempKey
Param2	SlotID	2	Which internal slot is to be used to generate the response. Only bits 3-0 are used.
Data1	ClientChal	32	Challenge sent to Client. (Must appear in the input stream).
Data2	ClientResp	32	Response generated by the Client.
Data3	OtherData	13	Remaining constant data needed for response calculation.

Table 8-9. Output parameter

Name	Size	Notes
Result	1	Returns a 1-byte value of zero if ClientResp matches the internally computed digest, one if there is a mismatch.

The message that is hashed with the SHA-256 algorithm consists of the following information:

32 bytes	key<SlotID> or TempKey (depending on the mode)
32 bytes	ClientChal or TempKey (depending on the mode)
4 bytes	OtherData<0:3>
8 bytes	OTP<0:7> or zeros (depending on the mode)
3 bytes	OtherData<4:6>
1 byte	SN<8>
4 bytes	OtherData<7:10>
2 bytes	SN<0:1>
2 bytes	OtherData<11:12>

The purpose of OtherData is to construct a SHA-256 message that matches identically to the MAC message that was used to produce ClientResp. By comparing the message used for the SHA-256 of the `MAC` command, OtherData is parsed as follows:

Table 8-10. OtherData

Size	CheckMac	MAC	Notes
1	OtherData<0>	OpCode	MAC OpCode = `0x08`
1	OtherData<1>	Mode	Mode used for `MAC` command.
2	OtherData<2:3>	SlotID	SlotID used for `MAC` command.
3	OtherData<4:6>	OTP<8:10>	OTP<8:10> used for `MAC` command. (Useful for Legacy.)
4	OtherData<7:10>	SN<4:7>	SN<4:7> used for `MAC` command. (Unique per Client.)
2	OtherData<11:12>	SN<2:3>	SN<2:3> used for `MAC` command. (Unique per Client.)

© 2018 Microchip Technology Inc.

Figure 8-1. Data Flow for CheckMac Command

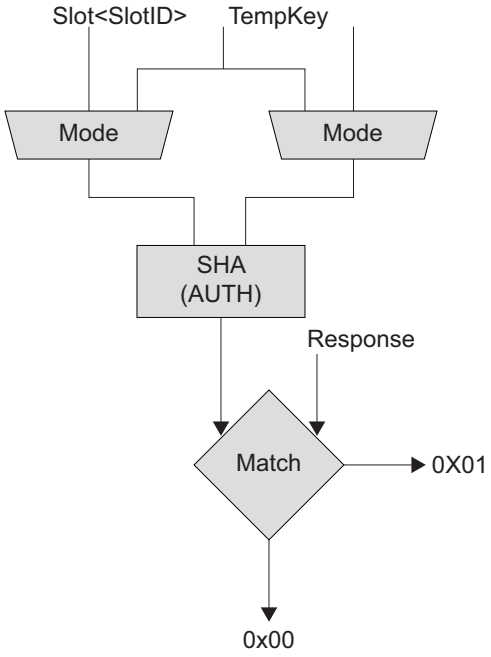

8.5.6 `DeriveKey` Command

The device combines the current value of a key with the nonce stored in TempKey using SHA-256 and places the result into the target key slot. SlotConfig<TargetKey>.Bit13 must be set or `DeriveKey` returns an error.

If SlotConfig<TargetKey>.Bit12 is zero, the source key that is combined with TempKey is the target key specified in the command line (Roll-Key operation). If SlotConfig<TargetKey>.Bit12 is one, the source key is the parent key of the target key, which is found in SlotConfig<TargetKey>.WriteKey (Create Key operation).

Prior to execution of the `DeriveKey` command, the `Nonce` command must have been run to create a valid nonce in TempKey. Depending upon the state of bit two of the input mode, this nonce would have been created with the internal RNG, or it would have been fixed.

If SlotConfig<TargetKey>.Bit15 is set, an input MAC must be present and had been computed as follows:

SHA-256(ParentKey, Opcode, Param1, Param2, SN<8>, SN<0:1>)
where the ParentKey ID is always SlotConfig<TargetKey>.WriteKey.

If SlotConfig<TargetKey>.Bit12 or SlotConfig<TargetKey>.Bit15 is set and SlotConfig<ParentKey>.LimitedUse is also set, `DeriveKey` returns an error if UseFlag<ParentKey> is `0x00`. `DeriveKey` ignores LimitedUse and UseFlag for the target key if SlotConfig<TargetKey>.Bit12 and SlotConfig<TargetKey>.Bit15 are both zero.

For slots 0 through 7 only, if input parsing and the optional MAC check succeed, UseFlag<TargetKey> gets set to `0xFF` and UpdateCount<TargetKey> is incremented. If UpdateCount currently has a value of 0xFF, then it wraps to zero. If the command fails for any reason, these bytes can not be updated. The value of UpdateCount may be corrupted if power is interrupted during the execution of `DeriveKey`.

© 2018 Microchip Technology Inc.

Note: If the source and target keys are the same, there is a risk of permanent loss of the key value if power is interrupted during the Write operation. If the configuration bits permit it, then the key slot may be recovered using an authenticated and encrypted write based upon the parent key.

Table 8-11. Input Parameters

	Name	Size	Notes
Opcode	DeriveKey	1	0x1C
Param1	Random	1	**Bits 7-3:** Must be zero. **Bit 2:** The value of this bit must match the value in TempKey.SourceFlag or the command returns an error. **Bits 1-0:** Must be zero.
Param2	TargetKey	2	Key slot to be written.
Data	Mac	0 or 32	Optional MAC used to validate operation.

Table 8-12. Output parameter

Name	Size	Notes
Success	1	Upon successful completion, the ATSHA204A returns a value of zero.

The key written to the target slot is the result of a SHA-256 of the following message:

32 bytes	Target or parent key (depending on SlotConfig Bit12)
1 byte	Opcode
1 byte	Param1
2 bytes	Param2
1 byte	SN<8>
2 bytes	SN<0:1>
25 bytes	Zeros
32 bytes	TempKey.value

The data flow for this command is shown graphically in the figure below:

Figure 8-2. Data Flow for DeriveKey Command

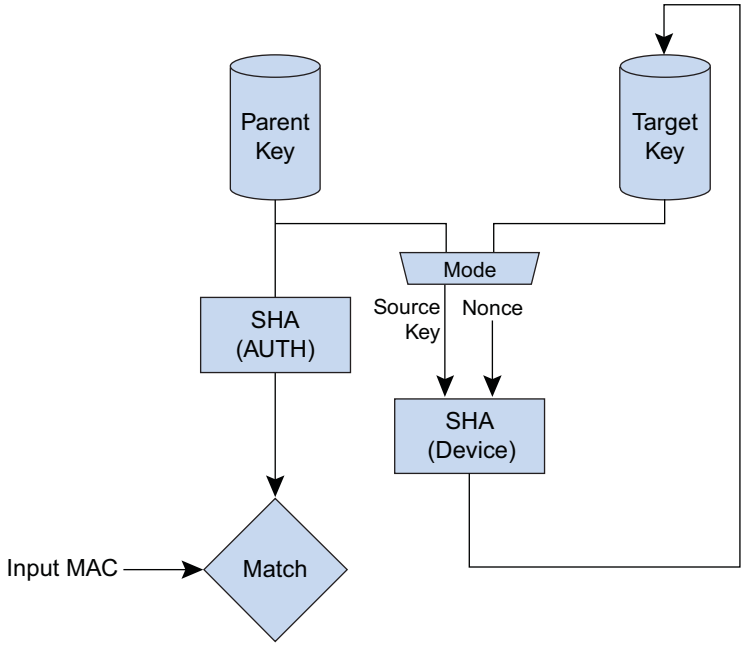

8.5.7 `DevRev` Command

`DevRev` command returns a single four-byte word representing the revision number of the device. Software should not depend upon this value because it may change from time to time.

Table 8-13. Input Parameters

	Name	Size	Notes
Opcode	DevRev	1	0x30.
Param1	Mode	1	Must be zero.
Param2	—	2	Must be zero.
Data	—	0	—

Table 8-14. Output Parameters

Name	Size	Notes
Success	4	The current device revision number.

8.5.8 `GenDig` Command

The `GenDig` command uses SHA-256 to combine a stored value with the contents of TempKey, which must have been valid prior to the execution of this command. The stored value can come from one of the data slots, either of the OTP pages, either of the first two pages of the Configuration zone, or retrieved from the hardware transport key array. The resulting digest is retained in TempKey and can be used in one of three ways as follows:

1. It can be included as part of the message used by the `MAC`, `CheckMac`, or `HMAC` commands. Because the MAC response output incorporates both the data used in the GenDig calculation and the secret key from the `MAC` command, it serves to authenticate the data stored in the Data and/or OTP zones.

2. A subsequent `Read` or `Write` command can use the digest to provide authentication and/or confidentiality for the data, in which case it is known as a data protection digest.
3. This command can be used for secure personalization by using a value from the transport key array. The resulting data protection digest would then be used by the `Write` Command.

If zone is two (Data) and SlotID is less than or equal to 15, the `GenDig` command sets TempKey.GenData to one and TempKey.SlotID to the input SlotID; otherwise, TempKey.GenData is set to zero.

Regardless of how the resulting digest is computed, it can never be read from the device.

If TempKey.Valid is invalid, this command returns an error. Upon command completion, the TempKey.Valid bit is set, indicating that a digest has been loaded and is ready for use. The TempKey.Valid bit is cleared when the next command is executed. See Section **Static RAM (SRAM)** for details.

For all SlotID values less than `0x8000`, the device uses the least-significant four bits of SlotID to determine the slot number from which to retrieve the key value from the Data zone of the EEPROM. SlotID values above `0x8000` reference keys stored in the masks of the design. In any event, all 16 bits of SlotID as input to the device are used as Param2 in the SHA-256 calculation.

If the zone parameter points to the Configuration zone, then this command returns an error if the Configuration zone is unlocked.

When the key specified on input to GenDig has the CheckOnly bit set, GenDig can be used to generate ephemeral keys matching those generated on Client CryptoAuthentication devices using the `DeriveKey` command. Keys that have the CheckOnly bit set represent situations in which the device is acting as a Host. In this case, the opcode and parameter bytes that would normally be included in the SHA calculation are replaced with bytes from the input stream.

Table 8-15. Input Parameters

	Name	Size	Notes
Opcode	GenDig	1	`0x15`
Param1	Zone	1	If `0x00` (Config), then use SlotID to specify either the first (SlotID=0) or second (SlotID = 1) 256-bit block of the Configuration zone. If `0x01` (OTP), then use SlotID to specify either the first or second 256-bit block of the OTP zone. If `0x02` (Data), then SlotID specifies a slot in the Data zone or a transport key in the hardware array. All other values are reserved and must not be used.
Param2	SlotID	2	Identification number of the key to be used, or selection of which OTP block.
Data	OtherData	4 or 0	Four bytes of data for SHA calculation when using a CheckOnly key; otherwise ignored.

Table 8-16. Output Parameter

Name	Size	Notes
Success	1	Upon successful execution, the ATSHA204A returns a value of zero.

If zone is Data and SlotConfig<SlotID>.CheckOnly is one, the SHA-256 message body used to create the resulting new TempKey consists of the following bytes:

32 bytes	Slot<SlotID>
4 bytes	OtherData
1 byte	SN<8>
2 bytes	SN<0:1>
25 bytes	Zeros
32 bytes	TempKey.value

In all other cases, the message use to create TempKey is as follows:

32 bytes	Config<SlotID> or OTP<SlotID> or Data.slot<SlotID> or TransportKey<SlotID>
1 byte	Opcode
1 byte	Param1
2 bytes	Param2
1 byte	SN<8>
2 bytes	SN<0:1>
25 bytes	Zeros
32 bytes	TempKey.value

8.5.9 `HMAC` Command

The `HMAC` command computes an HMAC/SHA-256 digest of a key stored in the device, a challenge and other information on the device. The output of this command is the output of the HMAC algorithm computed over this key and message. If the message includes the serial number of the device, the response is said to be “diversified”.

The normal command flow to use this command is as follows:

1. Run the `Nonce` command to load input challenge and optionally combine it with a generated random number. The result of this operation is a nonce stored internally on the device.
2. Optionally run the `GenDig` command to combine one or more stored EEPROM locations in the device with the nonce. The result is stored internally in the device.
3. Run this `HMAC` command to combine the output of step one (and Step 2 if desired) with an EEPROM key to generate an output response.

Step 2 addresses multiple use models. If the data in the EEPROM is a key, `GenDig` has the effect of authenticating the challenge with multiple secret keys. Alternatively, if the contents of the slot are data (which do not have to necessarily even be secret), `GenDig` has the effect of authenticating the value stored in that location.

Table 8-17. Input Parameters

	Name	Size	Notes
Opcode	HMAC	1	`0x11`.
Param1	Mode	1	Controls which fields within the device are used in the message.
Param2	SlotID	2	Which key is to be used to generate the response.

	Name	Size	Notes
			Param2<3:0> only are used to select a slot but all 16 bits are used in the HMAC message.
Data	—	0	—

Table 8-18. Ouput Parameter

Name	Size	Notes
Response	32	HMAC digest

The HMAC digest is computed using the key at SlotID as the HMAC key over a message consisting of the following information:

32 bytes	Zeros
32 bytes	TempKey
1 byte	Opcode (always 0x11)
1 byte	Mode
2 bytes	SlotID
8 bytes	OTP<0:7> or zeros (See table below)
3 bytes	OTP<8:10> or zeros (See table below)
1 byte	SN<8>
4 bytes	SN<4:7> or zeros (See table below)
2 bytes	SN<0:1>
2 bytes	SN<2:3> or zeros (See table below)

See Section **HMAC/SHA-256** for the governing documents which contain a complete description of how the various digests are calculated using SHA-256, the HMAC key and appropriate padding.

Table 8-19. Mode Encoding

Bits	Meaning
7	Must be zero.
6	0 = 48 Bits corresponding to SN<2:3> and SN<4:7> are set to zero. 1 = Include the 48 bits SN<2:3> and SN<4:7> in the message
5	0 = 64 Bits corresponding to OTP<0> through OTP<7> are set to 0. 1 = Include the first 64 OTP bits(8 Bytes) OTP<0> through OTP<7> in the message. If Mode<4> is set, the value of this mode bit is ignored.
4	0 = 88 Bits (11 Bytes) corresponding to OTP<0> through OTP<10> are set to 0. 1 = Include the first 88 OTP bits(11 Bytes) OTP<0> through OTP<10> in the message.
3	Must be zero.

Bits	Meaning
2	The value of this bit must match the value in TempKey.SourceFlag or the command returns an error.
1 – 0	Must be `0b00`.

8.5.10 `Lock` Command

Write either LockConfig or LockValue to `0x00`, to change the permissions in the designated zone.

This command fails if the designated zone is already locked.

Prior to locking the device, the ATSHA204A uses the CRC-16 algorithm to generate a summary digest of the designated zone(s). The calculation is made identically to the CRC computed over the input and output blocks.

- **Configuration Zone**: The CRC is calculated over all 88 bytes.
- **Data and OTP Zone**: Their contents are concatenated in that order to create the input to the CRC algorithm.

If the input summary does not match that computed on the device, an error is returned and the personalization process should be repeated.

Table 8-20. Input Parameters

	Name	Size	Notes
Opcode	Lock	1	0x17.
Param1	Zone	1	**Bit 7:** 0 = CRC is checked when the zone is locked. 1 = CRC check is ignored and the zone is locked, regardless of the state of the memory. Microchip does not recommend using this mode. **Bits 6-1:** All bits must be zero. **Bit 0:** 0 = Configuration zone 1= Data and OTP zone
Param2	Summary	2	Summary Digest of the designated zones, or should be `0x0000` if Zone<7> is set.
Data	—	0	—

Table 8-21. Output Parameter

Name	Size	Notes
Success	1	Upon successful execution, the ATSHA204A returns a value of zero.

8.5.11 `MAC` Command

The `MAC` command computes a SHA-256 digest of a key stored in the device, a challenge and other information on the device. The output of this command is the digest of this message. If the message includes the serial number of the device, the response is said to be “diversified”.

The normal command flow to use this command is as follows:

1. Run the `Nonce` command to load input challenge and optionally combine it with a generated random number. The result of this operation is a nonce stored internally on the device within tempkey.

2. Optionally run the `GenDig` command to combine one or more stored EEPROM locations in the device with the nonce. The result is stored internally in the device within tempkey. This capability permits two or more keys to be used as part of the response generation.
3. Run this `MAC` command to combine the output of Step 1 (and Step 2 if desired) with an EEPROM key to generate an output response (or digest).

Table 8-22. Input Parameters

	Name	Size	Notes
Opcode	MAC	1	`0x08`.
Param1	Mode	1	Controls which fields within the device are used in the message.
Param2	SlotID	2	Which internal key is to be used to generate the response. Bits 3-0 only are used to select a slot but all 16 bits are used in the SHA-256 message.
Data	Challenge	0 or 32	Input portion of message to be digested, ignored if Mode<0> is one.

Table 8-23. Output Parameter

Name	Size	Notes
Response	32	SHA-256 digest.

The message that is hashed with the SHA-256 algorithm consists of the following information:

32 bytes	key<SlotID> or TempKey (See table below)
32 bytes	Challenge or TempKey (See table below)
1 byte	Opcode (Always 0x08.)
1 byte	Mode
2 bytes	Param2
8 bytes	OTP<0:7> or zeros (See table below)
3 bytes	OTP<8:10> or zeros (See table below)
1 byte	SN<8>
4 bytes	SN<4:7> or zeros (See table below)
2 bytes	SN<0:1>
2 bytes	SN<2:3> or zeros (See table below)

Table 8-24. Mode Encoding

Bits	Meaning
7	Must be zero.
6	**0 =** Set the bits corresponding to SN<2:3> and SN<4:7> to 0. **1=** Include the 48 bits SN<2:3> and SN<4:7> in the message.
5	If Mode<4> is set, the value of this mode bit is ignored. **0 =** Set the Corresponding 64 OTP bits to 0.

Bits	Meaning
	1 = Include the first 64 OTP bits (OTP<0> through OTP<7>) in the message.
4	**0 =** Set the Corresponding 88 OTP bits to 0. **1 =** Include the first 88 OTP bits (OTP<0> through OTP<10>) in the message.
3	Must be zero.
2	If either Mode<0> or Mode<1> are set, Mode<2> must match the value in TempKey.SourceFlag or the command returns an error.
1	**0=** The first 32 bytes of the SHA message are loaded from one of the data slots. **1 =** The first 32 bytes are filled with TempKey.
0	**0 =** The second 32 bytes of the SHA message are taken from the input Challenge parameter. **1 =** The second 32 bytes are filled with the value in TempKey. This mode is recommended for all use.

8.5.12 `Nonce` Command

The `Nonce` command generates a nonce for use by a subsequent `GenDig`, `MAC`, `HMAC`, `Read`, or `Write` command by combining an internally generated random number with an input value from the system. The resulting nonce is stored internally in TempKey and the generated random number is returned to the system.

The input value is designed to prevent replay attacks against the Host and it must be externally generated by the system and passed into the device using this command. It may be any value that changes consistently, such as a nonvolatile counter, current real time of day and so forth; or it can be an externally generated random number.

To provide a nonce value for subsequent crypto commands, the input number and output random number are hashed together according to the information listed below. The resulting digest (nonce) is always stored in the TempKey register, TempKey.Valid is set and TempKey.SourceFlag is set to “Rand”. The nonce can be used by a subsequent `GenDig`, `Read`, `Write`, `HMAC`, or `MAC` command, thus the system must externally compute this digest value and store it externally to complete the execution of those commands.

Alternatively, this command can also be run in a pass-through mode if a fixed nonce is required for subsequent commands. In this case, the input value must be 32 bytes long and it is passed directly to TempKey without modification. No SHA-256 calculation is performed and TempKey.SourceFlag is set to “Input.” The nonce value in TempKey may not be used with `Read` or `Write` commands. If operated in this mode and with a repeated input number value, the device provides no protection against replay attacks.

Prior to the configuration section being locked, the RNG produces a 32 byte value of `0xFF FF 00 00 FF FF 00 00...` to facilitate testing. This test value is combined with the input value in the manner described above.

Table 8-25. Input Parameters

	Name	Size	Notes
Opcode	Nonce	1	0x16.
Param1	Mode	1	Controls the mechanism of the internal RNG and seed update.
Param2	Zero	2	Must be `0x0000`.
Data	NumIn	20,32	Input value from system.

Table 8-26. Output Parameter

Name	Size	Notes
RandOut	1 or 32	The output of the RNG or a single byte with a value of zero if Mode<0:1> is three.

If Mode<1:0> is `0b00` or `0b01`, the input NumIn parameter must be 20 bytes long and the SHA-256 message body used to create the nonce stored internally in TempKey consists of the following:

32 bytes	RandOut
20 bytes	NumIn from input stream
1 byte	Opcode (always `0x16`)
1 byte	Mode
1 byte	LSb of Param2 (should always be `0x00`)

Upon completion of the command, TempKey.SourceFlag is set to “Rand.”

If Mode<1:0> is `0b11`, this command operates in pass-through mode, the input parameter (NumIn) must be 32 bytes long and TempKey is loaded with NumIn. No SHA-256 calculation is performed, no data is returned to the system and TempKey.SourceFlag is set to “Input.”

If Mode<1:0> is `0b01`, the automatic seed update is suppressed. See Section **Random Number Generator (RNG)** for more details. Microchip recommends that Mode<1:0> is set to `0b00` for highest security.

Table 8-27. Mode Encoding

Bits	Meaning
7 – 2	Must be zero.
1 – 0	**00 =** Combine the new random number with NumIn, store in TempKey. Automatically update EEPROM seed only if necessary prior to random number generation. Recommended for highest security. **01 =** Combine the new random number with NumIn, store in TempKey. Generate random number using existing EEPROM seed, do not update EEPROM seed. **10 =** Invalid State **11 =** Operate in the pass-through mode and write TempKey with NumIn. (Should be 32 bytes).

8.5.13 `Pause` Command

All devices on the bus for which the configuration Selector byte does not match the input selector parameter go into the idle state. This command is used to prevent bus conflicts in a system that includes multiple ATSHA204A devices sharing the same bus.

The `Pause` command differs from the idle flag/sequence in that individual devices on the single pin bus may be selected to go into the idle state, as opposed to the idle flag which causes all the CryptoAuthentication devices on the bus into the idle state.

If the EEPROM Selector byte does not match the input selector parameter, the device immediately goes to the idle state. If the input selector parameter does match the configuration selector byte, the device returns a success code of `0x00`.

The `Pause` command cannot be used to put the devices into the sleep state.

Table 8-28. Input Parameters

	Name	Size	Notes
Opcode	Pause	1	0x01.
Param1	Selector	1	All devices that do not match this value go to idle state.
Param2	Zero	2	Must be `0x0000`.
Data	—	0	—

Table 8-29. Output Parameter

Name	Size	Notes
Success	1	If the command indicates that some other device should idle, the ATSHA204A returns a value of `0x00`. If this device goes to idle, no value is returned.

8.5.14 `Random` Command

The `Random` command generates a random number for use by the system.

Random numbers are generated through a combination of the output of a hardware RNG and an internal seed value stored in the EEPROM or SRAM. The external system may choose to update the internally stored EEPROM seed value prior to the generation of the random number as part of the execution of the `Nonce` or `Random` command, for highest security, Microchip recommends that the EEPROM seed always be updated.

The Random command does not provide a mechanism to integrate an input number with the internal stored seed. If this functionality is desired, the system should use the `Nonce` command and ignore the generated nonce.

Prior to the configuration section being locked, the RNG produces a 32 byte value of `0xFF, 0xFF, 0x00, 0x00, 0xFF, 0xFF, 0x00, 0x00...` to facilitate testing.

The same internally stored seeds are used for both the `Nonce` and `Random` commands. Use of Mode<0> ensures that the EEPROM is updated, if necessary.

Table 8-30. Input Parameters

	Name	Size	Notes
Opcode	Random	1	`0x1B`.
Param1	Mode	1	Controls the mechanism of the internal RNG and seed update.

© 2018 Microchip Technology Inc.

	Name	Size	Notes
Param2	Zero	2	Must be `0x0000`.
Data	—	0	—

Table 8-31. Output Parameter

Name	Size	Notes
RandOut	32	The output of the RNG.

Table 8-32. Mode Encoding

Bits	Meaning
7 – 1	Must be zero.
0	**0 =** Automatically update EEPROM seed only if necessary prior to random number generation. Recommended for highest security. **1 =** Generate a random number using existing EEPROM seed; do not update EEPROM seed.

8.5.15 `Read` Command

The `Read` command reads words (one 4-byte word or an 8-word block of 32 bytes) from one of the memory zones of the device. The data may optionally be encrypted before being returned to the system. See Section **EEPROM Data Zone** for Data zone byte and word addressing information.

If reading from a slot in which SlotConfig.EncryptRead is set, the `GenDig` command must have been run prior to the execution of this command to generate the key that is used for encryption. If the slot number is even, or if the CheckMacSource bit corresponding to this slot is zero, then the input nonce to `GenDig` must have been a random number. Finally, the key specified in SlotConfig.ReadKey must have been used in the `GenDig` calculation.

The device encrypts data to be read by XORing each byte read from the EEPROM with the corresponding byte from TempKey. Encrypted reads of the Configuration and/or OTP zones are not permitted.

The byte addresses to be read should be divided by four (drop the least-significant two bits) before being passed to the device. If 32 bytes are being read, the least-significant three bits of the input address are ignored. Addresses beyond the end of the specified zone result in an error.

The following restrictions apply to the following three zones:

- **Data**
  If the Data zone is unlocked, this command returns an error; otherwise, the values within the corresponding SlotConfig word act to control access to the data slot. If SlotConfig.IsSecret is set and a four byte read is attempted, the device returns an error. If EncryptRead is set, this command encrypts the data as specified above. If IsSecret is set and EncryptRead is clear, then this command returns an error. If IsSecret is clear and EncryptRead is clear, then this command returns the desired slot in the clear.
- **Configuration**
  The words within this zone are always readable using this command, regardless of the value of LockConfig.

- **OTP**
  If the OTP zone is unlocked, then this command returns an error. Once locked, if OTP mode is not set to legacy, then all words can be read. If OTP mode is legacy, then only four byte reads are permitted and addresses of a zero or one returns an error.

Table 8-33. Input Parameters

	Name	Size	Notes
Opcode	Read	1	`0x02`
Param1	Zone	1	**Bit 7:** 0 = 4 bytes are read 1 = 32 bytes are read. Must be zero if reading from OTP zone in Legacy mode. **Bits 6-2:** All bits must be zero. **Bits 1-0:** Select among Config, OTP, or Data. See Section **Zone Encoding**.
Param2	Address	2	Address of first word to be read within the zone. See Section **Address Encoding**.
Data	—	0	—

Table 8-34. Output Parameter

Name	Size	Notes
Contents	4 or 32	The contents of the specified memory location.

8.5.15.1 Read Operations within the Data Zone

Read operations within the Data zone depend upon the state of IsSecret and EncryptRead according to the following table:

Table 8-35. Read Operation Permission

IsSecret	EncryptRead	Description
0	0	Clear text reads are always permitted from this slot. Slots set to this state should never be used as key storage. Either 4 or 32 bytes may be read at a time.
0	1	Prohibited. No security is guaranteed for slots using this code.
1	0	Reads are never permitted from this slot. Slots set to this state can still be used for key storage.
1	1	Reads from this slot are encrypted using the encryption algorithm documented in the Read command description (See Section **Read Command**). The encryption key is in the slot specified by ReadKey. 4-byte reads and writes are prohibited.

If reading the Data zone and the EncryptRead bit is set in the corresponding SlotConfig word, then the following actions are taken to encrypt the data:

- All of the TempKey register bits must be properly set as follows, or this command returns an error:

```
TempKey.Valid == 1

TempKey.GenData == 1
```

```
TempKey.SlotID == SlotConfig.ReadKey
```

- If the slot number being read is even, then TempKey.SourceFlag must be “RAND”.
- If the slot number is odd, then TempKey.SourceFlag must match the value in Config.CheckMacSource corresponding to the slot.
- XOR the data from the memory zone with TempKey. Return as “Contents.”

8.5.16 SHA Command

The SHA command computes a SHA-256 digest for general purpose use by the system. Any message length can be accommodated. The system is responsible for sending the pad and length bytes with the last block.

Calculation of a digest occurs through the following two steps:

1. **Initialization**
   Setup the SHA-256 calculation engine by overwriting the current value of TempKey with the initialization constant. Force the TempKey flags to match the state they would have after a Nonce(Fixed) command. This mode does not accept any message bytes.
2. **Compute**
   The command can be called a variable number of times with this mode to add bytes to the message. Each iteration of this mode must include a message of 64 bytes. The output buffer always contains the digest, which can be ignored if desired. The digest is also loaded into TempKey.

The SHA(Init) command must be run before any SHA(Compute) commands are accepted. The system may run as many SHA(Compute) commands as required to compute the desired digest. An error is returned if any command other than SHA is run between the “Init” iteration and the last “Compute” iteration. The command also returns a Parse error if the Mode byte has a value other than 0x00 or 0x01.

The intermediate digest stored in TempKey is invalidated if the device is put to sleep or the watchdog timer expires. The system software must ensure that either the entire message is sent to the device during a single wake/watchdog interval or that the appropriate Idle sequences are inserted between the SHA commands.

Table 8-36. Input Parameters

	Name	Size	Notes
Opcode	SHA	1	0x47
Param1	Mode	1	**Bits 7-1:** Must be zero. **Bit 0:** 0 = (Init): Load TempKey with the initialization value for SHA-256. No message bytes are accepted (Length must be zero). 1 = (Compute): Add 64 bytes in the message parameter to the SHA context and return the digest
Param2	Param2	2	Must be 0x0000.
Data	Message	0 or 64	64 bytes of data to be included into the hash operation. Ignored if Mode<0> is zero.

Table 8-37. Output Parameter

Name	Size	Notes
Response	1 or 32	The SHA-256 digest if Mode<0> = 1; otherwise, `0x00` for success or an error code.

8.5.17 `UpdateExtra` Command

The `UpdateExtra` command is used to update the values of the two extra bytes within the Configuration zone (location 84 and 85) after the Configuration zone has been locked. It can also be used to quickly decrement the usage counters attached to a key when appropriate.

If Mode<1> is set, then the command implements a fast decrement of the limited use counters that may be associated with a particular key. If the slot indicated by the “NewValue” parameter does not contain a key for which limited use is implemented or enabled, then the command returns silently without taking any action. If the indicated slot contains a limited use key which does not have any uses remaining, then the command returns an error; otherwise, one of the remaining usage bits is cleared. The command does not modify Config.UpdateCount for the slot in question.

If the mode parameter indicates UserExtra at address 84:

- If the current value in UserExtra (byte 84 of Configuration zone) is zero, then UpdateExtra writes this byte with the LS byte of NewValue and returns success.
- If the current value in UserExtra is non-zero, then the command returns an execution error.

If the mode parameter indicates selector at address 85:

- If SelectorMode (byte 19 of the Configuration zone) is non-zero and Selector (byte 85 of the Configuration zone) is zero, then this command writes Selector with the LSB of NewValue and return success. Once written to a non-zero value, it is then locked against further updating.
- If SelectorMode has a value of zero, indicating that no check of the current Selector should be made, then this command always updates Selector and always succeeds.

Table 8-38. Input Parameters

	Name	Size	Notes
Opcode	UpdateExtra	1	`0x20`.
Param1	Mode	1	**Bits 7 – 2:** Must be zero. **Bit 1:** `0` = Update Config byte 84 or 85 `1` = Ignore bit 0 and decrement the limited use counter associated with the key in slot “NewValue” **Bit 0:** If zero, update Config byte 84. If one, update Config byte 85.
Param2	NewValue	2	**LSB:** Value to optionally be written to location 84 or 85 in Configuration zone. **MSB:** Must be `0x00`.
Data	—	0	—

Table 8-39. Output Parameter

Name	Size	Notes
Success	1	If the memory byte was updated, this command returns a value of `0x00`; otherwise, it returns an Execution error.

8.5.18 `Write` Command

The `Write` command writes either a one 4-byte word or an 8-word block of 32 bytes to one of the EEPROM zones upon the device. Depending on the value of the WriteConfig byte for this slot the data may be required to be encrypted by the system prior to being sent to the device.

The following restrictions apply to writes within zones using this command:

- **Data Zone**: If the Configuration zone is locked and the Data zone is unlocked, then all bytes in all zones can be written with either plain text or encrypted data using 32 byte writes. After the Data zone is locked, the values within the WriteConfig bytes control access to the data slots. If the WriteConfig bits for this slot are set to “always”, then the input data should be passed to the device in the clear. If SlotConfig<14> is set to one, the input data should be encrypted and an input MAC calculated.
- **Configuration Zone**: If the Configuration zone is locked or Zone<6> is set, then this command returns an error; otherwise the bytes are written as requested. Any attempt to write any byte for which Writes are permanently prohibited (per Section **EEPROM Data Zone**) results in a command error with no modifications to the EEPROM.
- **OTP Zone**: If the OTP zone is unlocked, then all bytes can be written with this command. If the OTP zone is locked and the OTPmode byte is read-only or legacy, then this command returns an error; otherwise, OTP mode should be consumption and this command sets to zero those bits in the OTP zone that correspond to the zero bits in the input parameter value. When the OTP zone is locked, encrypted writes to it are never permitted regardless of OTPmode.

Four byte writes are only permitted in the Data and OTP zones if all four of the following conditions are met:

- SlotConfig.IsSecret must be zero.
- SlotConfig.WriteConfig must be “always.”
- The input data must not be encrypted.
- The Data/OTP zones must be locked.

Four byte writes return an error under all other circumstances.

The least significant three bits of Param2, Address<2:0>, indicate the word within the block, or are ignored if an entire 32 byte block is being written. Address<6:3> contains the slot number for writes to the Data zone, or the block number for the Configuration and OTP zones. Address values beyond the size of the specified zone result in the command returning an error.

Any attempt to write the OTP and/or Data zones prior to the configuration section being locked results in the device returning an error code.

8.5.18.1 Input Data Encryption

The input data may be encrypted to prevent snooping on the bus during personalization or system operation. The system should encrypt the data by XORing the plain text with the current value in TempKey. Upon receipt, the device will XOR the input data with TempKey to restore the plain text prior to writing to the EEPROM.

© 2018 Microchip Technology Inc.

Whenever the input data is encrypted an authorizing input MAC is always required when writing the Data zone. This MAC is computed as follows:

SHA-256 (TempKey, Opcode, Param1, Param2, SN<8>, SN<0:1>, <25 bytes of 0's>, PlainTextData)

Prior to locking of the OTP/Data zones, Zone<6> is used to indicate to the device whether or not the input data is encrypted. After locking of the OTP/Data zones, Zone<6> is ignored and only SlotConfig<14> corresponding to the slot being written is used to determine whether or not the input data is encrypted.

If data encryption is indicated, then TempKey must be valid prior to this command being called and it must be the result of `GenDig`. Specifically, this means that TempKey.Valid and TempKey.GenDig must both be set to one. Prior to data locking, any key can be used to generate TempKey. After locking, the last slot used by `GenDig` for TempKey creation and stored in TempKey.SlotID must match that in SlotConfig.WriteKey. If the slot number being written is even, then TempKey.SourceFlag must be RAND. If the slot number is odd, then TempKey.SourceFlag must match the value in Config.CheckMacSource corresponding to the slot.

Table 8-40. Input Parameters

	Name	Size	Notes
Opcode	Write	1	`0x12`
Param1	Zone	1	**Bit 7:** `0` = 4 bytes of date are written to the specified zone. `1` = 32 bytes of data are written to the specified zone. **Bit 6:** `0` = Data is written in the clear. 1 = Input data must be encrypted. Must be zero if Data/OTP zones are locked. **Bits 5-2:** Must be zero. **Bits 1-0:** Select among Config, OTP or Data. See Section **Zone Encoding**.
Param2	Address	2	Address of first word to be written within the zone. See Section **Address Encoding**.
Data_1	Value	4 or 32	Information to be written to the zone; may be encrypted.
Data_2	Mac	0 or 32	Message authentication code to validate address and data.

Table 8-41. Output Parameter

Name	Size	Notes
Success	1	Upon successful completion, the ATSHA204A returns a value of `0x00`.

9. Compatibility

The ATSHA204A is designed to be fully compatible with the ATSHA204 for all Host, Client and personalization operations. Note the following important refinements that have been made to the ATSHA204A:

- Active power consumption is lower.
- Two-wire connection mode is supported without the requirement for an external diode.
- The new `SHA` command permits general computation of a SHA digest without the need for crypto software in the Host.
- Write operations during personalization always require a MAC to be passed to the device to prevent man-in-the-middle attacks. (Some versions of the ATSHA204 ignored the MAC on Write when the Data zone was unlocked.)
- The `UpdateExtra` command can now be used to quickly decrement the limited-use counters when a multi-step count is required.
- The Copy mode of the `CheckMac` command can now be run with a fixed nonce which simplifies the implementation of protected secure boot validation and other related tasks.
- The new Consumption mode on the OTP zone provides additional capability for usage tracking.
- Write operations to the OTP or Data zone require 32 bytes when the Configuration zone is locked and the OTP and Data zones are unlocked. The ATSHA204 allowed 4 byte `Write` commands for this lock state.

© 2018 Microchip Technology Inc.

10. Mechanical

10.1 Pinout

The device is offered in multiple packages:

- 8-pad UDFN
- 3-lead SOT23
- 8-lead SOIC
- 8-lead TSSOP(Note)
- 3-lead CONTACT intended for mechanical, not soldered, connection.

The pinouts are as follows:

Table 10-1. Package Pinouts

Name	3-lead SOT23	8-lead SOIC, 8-lead TSSOP(Note) and 8-pad UDFN	3-lead CONTACT
SDA	1	5	1
SCL	—	6	—
V_{CC}	2	8	3
GND	3	4	2
NC	—	1, 2, 3, 7	—

Note: Not recommended for new designs.

11. Package Marking Information

As part of Microchip's overall security features the part mark for all crypto devices is intentionally vague. The marking on the top of the package does not provide any information as to the actual device type or the manufacturer of the device. The alphanumeric code on the package provides manufacturing information and will vary with assembly lot. The packaging mark should not be used as part of any incoming inspection procedure.

© 2018 Microchip Technology Inc.

12. Package Drawings

12.1 8-pad UDFN

8-Lead Ultra Thin Plastic Dual Flat, No Lead Package (Q4B) - 2x3 mm Body [UDFN]
Atmel Legacy YNZ Package

Note:	For the most current package drawings, please see the Microchip Packaging Specification located at http://www.microchip.com/packaging

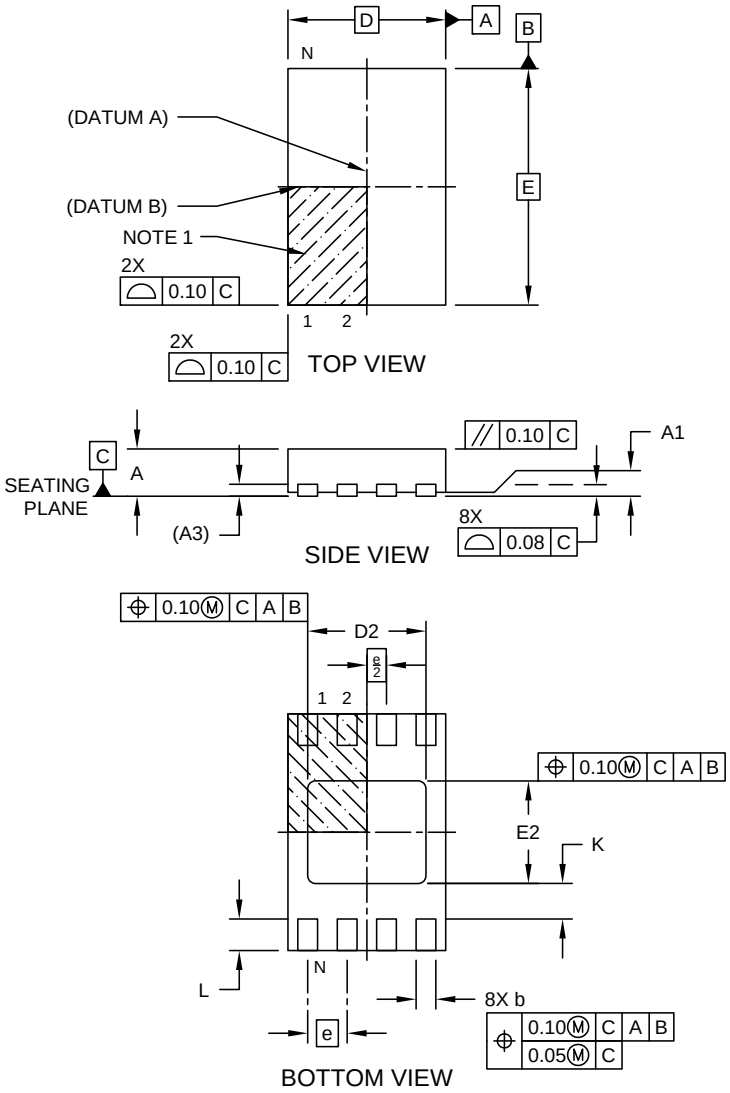

Microchip Technology Drawing C04-21355-Q4B Rev A Sheet 1 of 2

8-Lead Ultra Thin Plastic Dual Flat, No Lead Package (Q4B) - 2x3 mm Body [UDFN] Atmel Legacy YNZ Package

Note: For the most current package drawings, please see the Microchip Packaging Specification located at http://www.microchip.com/packaging

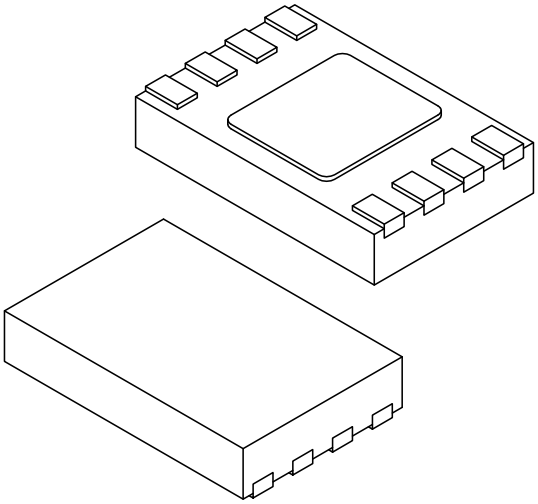

Units		MILLIMETERS		
Dimension Limits		MIN	NOM	MAX
Number of Terminals	N	8		
Pitch	e	0.50 BSC		
Overall Height	A	0.50	0.55	0.60
Standoff	A1	0.00	0.02	0.05
Terminal Thickness	A3	0.152 REF		
Overall Length	D	2.00 BSC		
Exposed Pad Length	D2	1.40	1.50	1.60
Overall Width	E	3.00 BSC		
Exposed Pad Width	E2	1.20	1.30	1.40
Terminal Width	b	0.18	0.25	0.30
Terminal Length	L	0.35	0.40	0.45
Terminal-to-Exposed-Pad	K	0.20	-	-

Notes:

1. Pin 1 visual index feature may vary, but must be located within the hatched area.
2. Package is saw singulated
3. Dimensioning and tolerancing per ASME Y14.5M
   BSC: Basic Dimension. Theoretically exact value shown without tolerances.
   REF: Reference Dimension, usually without tolerance, for information purposes only.

Microchip Technology Drawing C04-21355-Q4B Rev A Sheet 2 of 2

8-Lead Ultra Thin Plastic Dual Flat, No Lead Package (Q4B) - 2x3 mm Body [UDFN] Atmel Legacy YNZ Package

Note: For the most current package drawings, please see the Microchip Packaging Specification located at http://www.microchip.com/packaging

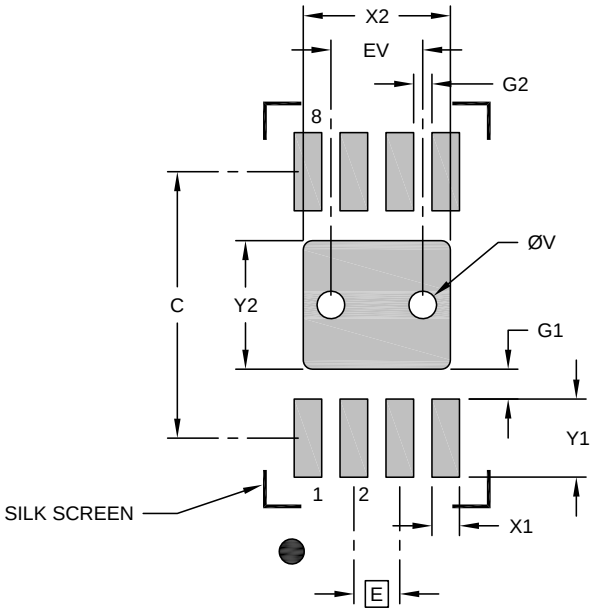

RECOMMENDED LAND PATTERN

Units		MILLIMETERS		
Dimension Limits		MIN	NOM	MAX
Contact Pitch	E		0.50 BSC	
Optional Center Pad Width	X2			1.60
Optional Center Pad Length	Y2			1.40
Contact Pad Spacing	C		2.90	
Contact Pad Width (X8)	X1			0.30
Contact Pad Length (X8)	Y1			0.85
Contact Pad to Center Pad (X8)	G1	0.20		
Contact Pad to Contact Pad (X6)	G2	0.33		
Thermal Via Diameter	V		0.30	
Thermal Via Pitch	EV		1.00	

Notes:

1. Dimensioning and tolerancing per ASME Y14.5M
   BSC: Basic Dimension. Theoretically exact value shown without tolerances.
2. For best soldering results, thermal vias, if used, should be filled or tented to avoid solder loss during reflow process

Microchip Technology Drawing C04-21355-Q4B Rev A

12.2 8-lead SOIC

8-Lead Plastic Small Outline - Narrow, 3.90 mm (.150 In.) Body [SOIC]
Atmel Legacy

Note:	For the most current package drawings, please see the Microchip Packaging Specification located at http://www.microchip.com/packaging

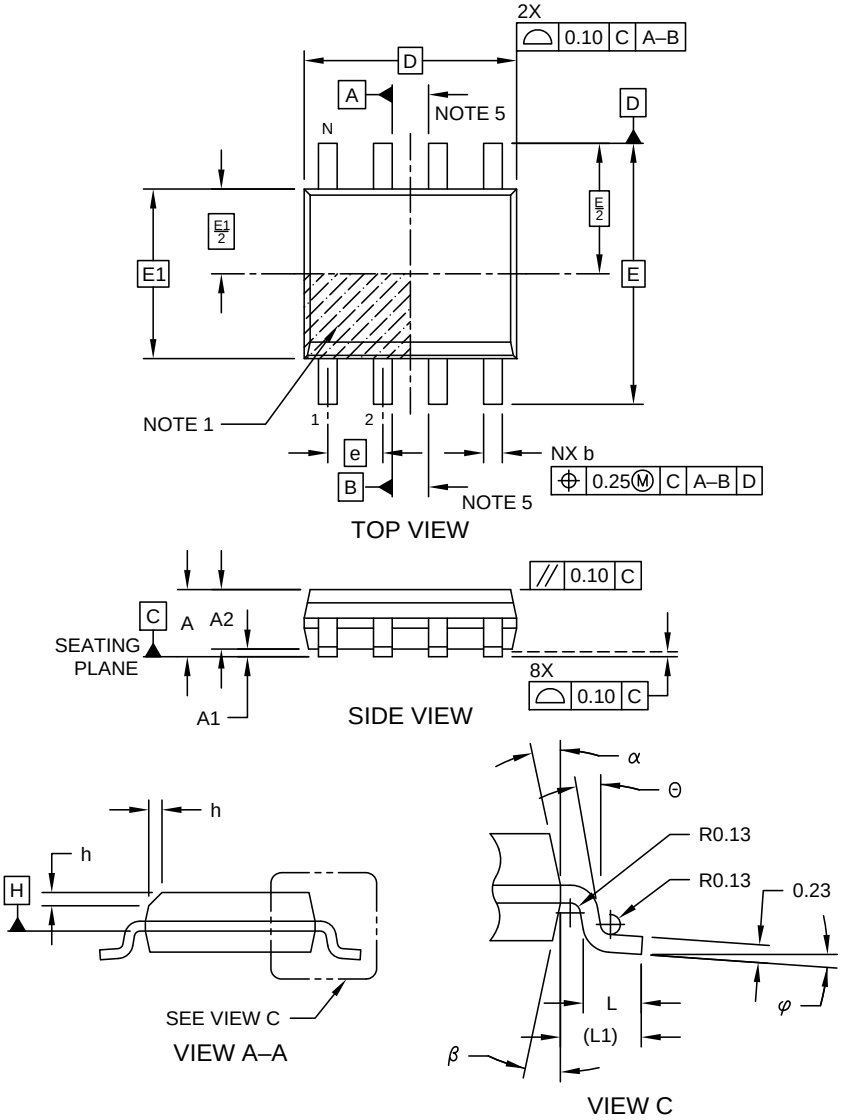

Microchip Technology Drawing No. C04-057-Atmel Rev D Sheet 1 of 2

8-Lead Plastic Small Outline - Narrow, 3.90 mm (.150 In.) Body [SOIC]
Atmel Legacy

Note: For the most current package drawings, please see the Microchip Packaging Specification located at http://www.microchip.com/packaging

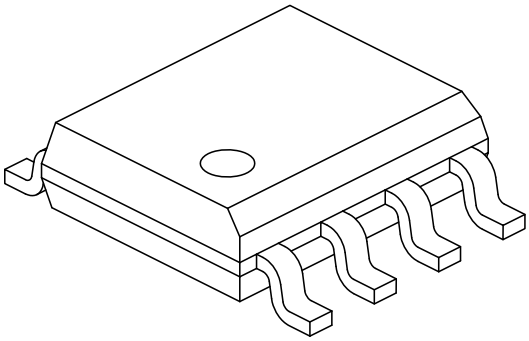

Units		MILLIMETERS		
Dimension Limits		MIN	NOM	MAX
Number of Pins	N	8		
Pitch	e	1.27 BSC		
Overall Height	A	-	-	1.75
Molded Package Thickness	A2	1.25	-	-
Standoff §	A1	0.10	-	0.25
Overall Width	E	6.00 BSC		
Molded Package Width	E1	3.90 BSC		
Overall Length	D	4.90 BSC		
Chamfer (Optional)	h	0.25	-	0.50
Foot Length	L	0.40	-	1.27
Footprint	L1	1.04 REF		
Foot Angle	φ	0°	-	8°
Lead Thickness	c	0.17	-	0.25
Lead Width	b	0.31	-	0.51
Mold Draft Angle Top	α	5°	-	15°
Mold Draft Angle Bottom	β	5°	-	15°

Notes:

1. Pin 1 visual index feature may vary, but must be located within the hatched area.
2. § Significant Characteristic
3. Dimensions D and E1 do not include mold flash or protrusions. Mold flash or protrusions shall not exceed 0.15mm per side.
4. Dimensioning and tolerancing per ASME Y14.5M
   BSC: Basic Dimension. Theoretically exact value shown without tolerances.
   REF: Reference Dimension, usually without tolerance, for information purposes only.
5. Datums A & B to be determined at Datum H.

Microchip Technology Drawing No. C04-057-OA Rev D Sheet 2 of 2

8-Lead Plastic Small Outline - Narrow, 3.90 mm (.150 In.) Body [SOIC]
Atmel Legacy

Note: For the most current package drawings, please see the Microchip Packaging Specification located at http://www.microchip.com/packaging

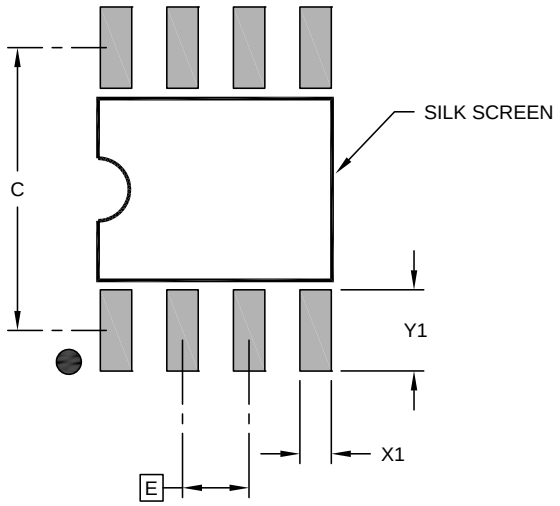

RECOMMENDED LAND PATTERN

Units		MILLIMETERS		
Dimension Limits		MIN	NOM	MAX
Contact Pitch	E	1.27 BSC		
Contact Pad Spacing	C		5.40	
Contact Pad Width (X8)	X1			0.60
Contact Pad Length (X8)	Y1			1.55

Notes:

1. Dimensioning and tolerancing per ASME Y14.5M
   BSC: Basic Dimension. Theoretically exact value shown without tolerances.

Microchip Technology Drawing C04-2057-M6B Rev B

12.3 8-lead TSSOP

8-Lead Plastic Thin Shrink Small Outline (ST) – 4.4 mm Body [TSSOP]

Note: For the most current package drawings, please see the Microchip Packaging Specification located at http://www.microchip.com/packaging

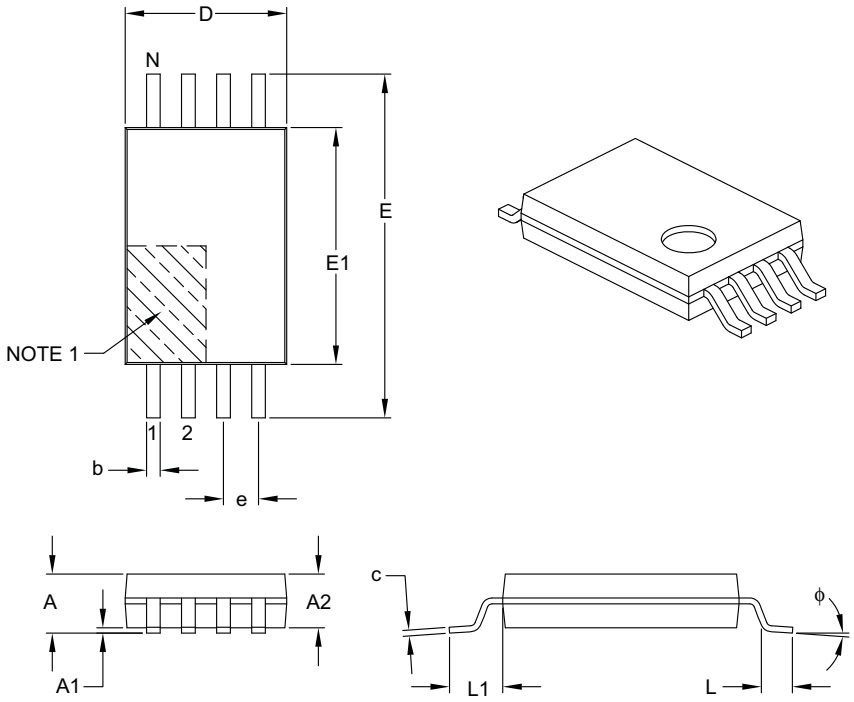

Units		MILLIMETERS		
Dimension Limits		MIN	NOM	MAX
Number of Pins	N	8		
Pitch	e	0.65 BSC		
Overall Height	A	–	–	1.20
Molded Package Thickness	A2	0.80	1.00	1.05
Standoff	A1	0.05	–	0.15
Overall Width	E	6.40 BSC		
Molded Package Width	E1	4.30	4.40	4.50
Molded Package Length	D	2.90	3.00	3.10
Foot Length	L	0.45	0.60	0.75
Footprint	L1	1.00 REF		
Foot Angle	ϕ	0°	–	8°
Lead Thickness	c	0.09	–	0.20
Lead Width	b	0.19	–	0.30

Notes:

1. Pin 1 visual index feature may vary, but must be located within the hatched area.
2. Dimensions D and E1 do not include mold flash or protrusions. Mold flash or protrusions shall not exceed 0.15 mm per side.
3. Dimensioning and tolerancing per ASME Y14.5M.
   BSC: Basic Dimension. Theoretically exact value shown without tolerances.
   REF: Reference Dimension, usually without tolerance, for information purposes only.

Microchip Technology Drawing C04-086B

8-Lead Plastic Thin Shrink Small Outline (ST) - 4.4 mm Body [TSSOP]

Note: For the most current package drawings, please see the Microchip Packaging Specification located at http://www.microchip.com/packaging

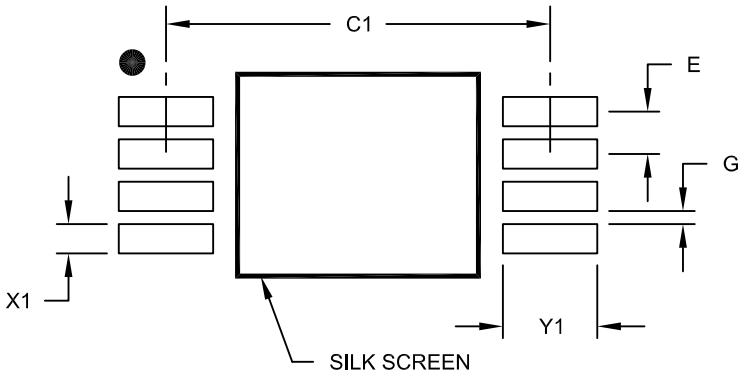

RECOMMENDED LAND PATTERN

Units		MILLIMETERS		
Dimension Limits		MIN	NOM	MAX
Contact Pitch	E		0.65 BSC	
Contact Pad Spacing	C1		5.90	
Contact Pad Width (X8)	X1			0.45
Contact Pad Length (X8)	Y1			1.45
Distance Between Pads	G	0.20		

Notes:

1. Dimensioning and tolerancing per ASME Y14.5M
   BSC: Basic Dimension. Theoretically exact value shown without tolerances.

Microchip Technology Drawing No. C04-2086A

12.4 3 Lead Contact

3-Lead Contact Package (LAB) - 6.54x2.5 mm Body [Contact]
Atmel Legacy Global Package Code RHB

Note:	For the most current package drawings, please see the Microchip Packaging Specification located at http://www.microchip.com/packaging

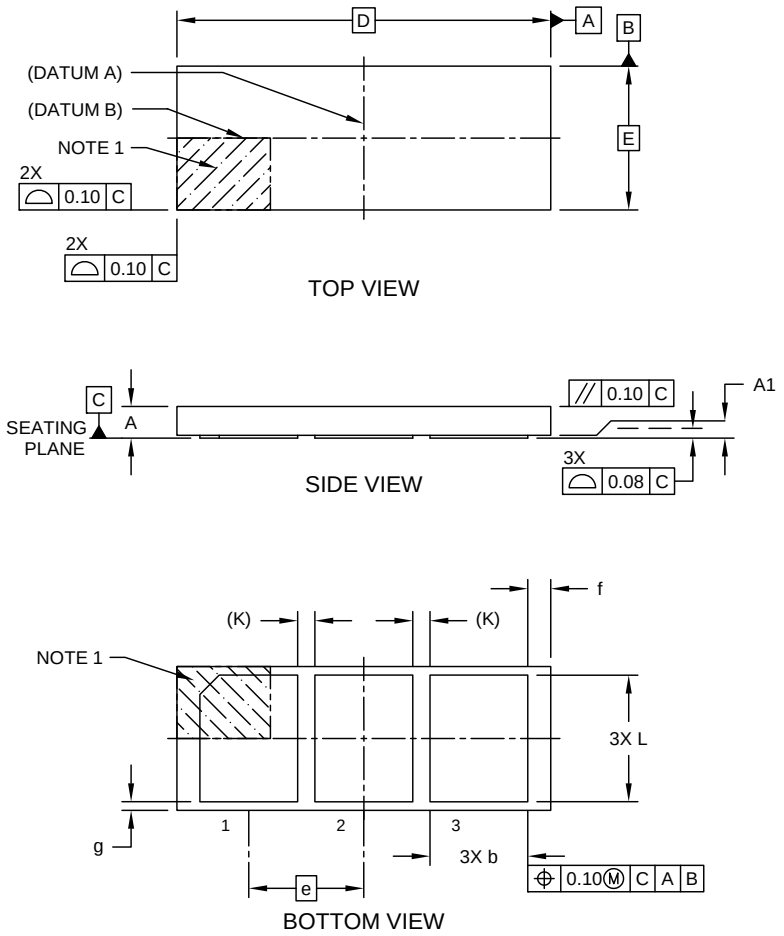

Microchip Technology Drawing C04-21303 Rev A Sheet 1 of 2

3-Lead Contact Package (LAB) - 6.54x2.5 mm Body [Contact]
Atmel Legacy Global Package Code RHB

Note: For the most current package drawings, please see the Microchip Packaging Specification located at http://www.microchip.com/packaging

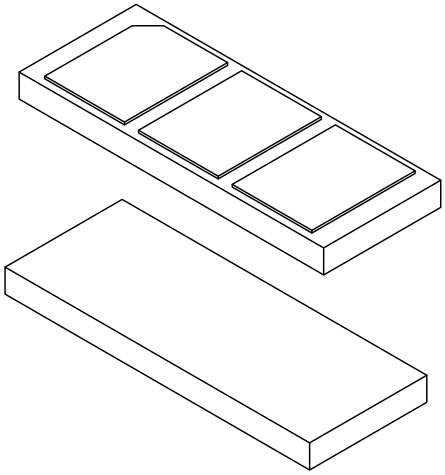

Units		MILLIMETERS		
Dimension Limits		MIN	NOM	MAX
Number of Terminals	N	3		
Pitch	e	2.00 BSC		
Overall Height	A	0.45	0.50	0.55
Standoff	A1	0.00	0.02	0.05
Overall Length	D	6.50 BSC		
Overall Width	E	2.50 BSC		
Terminal Width	b	1.60	1.70	1.80
Terminal Length	L	2.10	2.20	2.30
Terminal-to-Terminal Spacing	K	0.30 REF		
Package Edge to Terminal Edge	f	0.30	0.40	0.50
Package Edge to Terminal Edge	g	0.05	0.15	0.25

Notes:

1. Pin 1 visual index feature may vary, but must be located within the hatched area.
2. Dimensioning and tolerancing per ASME Y14.5M
   BSC: Basic Dimension. Theoretically exact value shown without tolerances.
   REF: Reference Dimension, usually without tolerance, for information purposes only.

Microchip Technology Drawing C04-21303 Rev A Sheet 2 of 2

12.5 3-lead SOT23

3-Lead Plastic Small Outline Transistor (NB) [SOT-23]

Note: For the most current package drawings, please see the Microchip Packaging Specification located at http://www.microchip.com/packaging

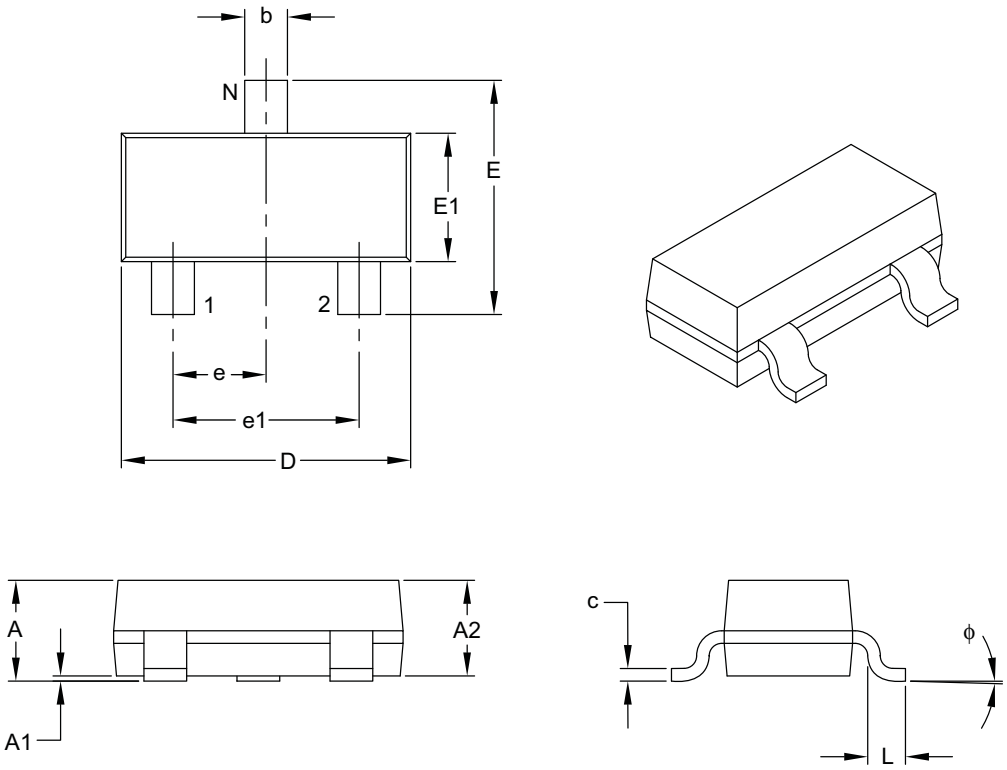

Units		MILLIMETERS		
Dimension Limits		MIN	NOM	MAX
Number of Pins	N	3		
Lead Pitch	e	0.95 BSC		
Outside Lead Pitch	e1	1.90 BSC		
Overall Height	A	0.89	–	1.12
Molded Package Thickness	A2	0.79	0.95	1.02
Standoff	A1	0.01	–	0.10
Overall Width	E	2.10	–	2.64
Molded Package Width	E1	1.16	1.30	1.40
Overall Length	D	2.67	2.90	3.05
Foot Length	L	0.13	0.50	0.60
Foot Angle	ϕ	0°	–	10°
Lead Thickness	c	0.08	–	0.20
Lead Width	b	0.30	–	0.54

Notes:

1. Dimensions D and E1 do not include mold flash or protrusions. Mold flash or protrusions shall not exceed 0.25 mm per side.
2. Dimensioning and tolerancing per ASME Y14.5M.
   BSC: Basic Dimension. Theoretically exact value shown without tolerances.

Microchip Technology Drawing C04-104B

3-Lead Plastic Small Outline Transistor (NB) [SOT-23]

Note: For the most current package drawings, please see the Microchip Packaging Specification located at http://www.microchip.com/packaging

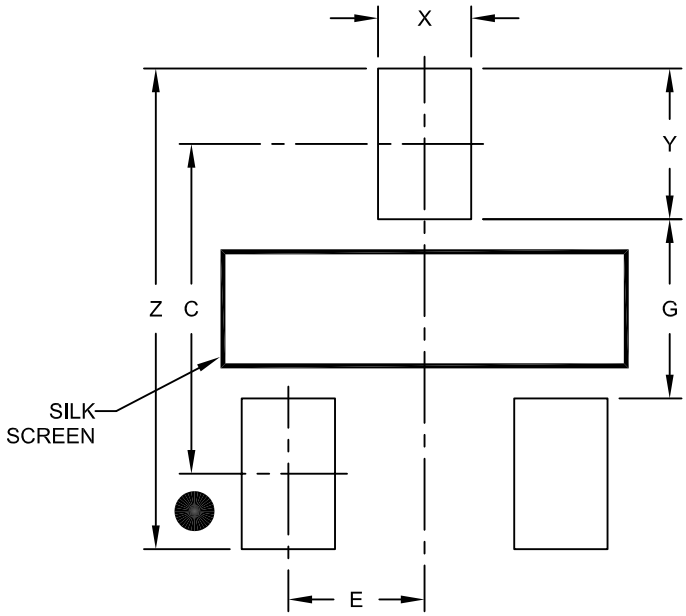

RECOMMENDED LAND PATTERN

Units		MILLIMETERS		
Dimension Limits		MIN	NOM	MAX
Contact Pitch	E	0.95 BSC		
Contact Pad Spacing	C		2.30	
Contact Pad Width (X3)	X			0.65
Contact Pad Length (X3)	Y			1.05
Distance Between Pads	G	1.25		
Overall Width	Z			3.35

Notes:

1. Dimensioning and tolerancing per ASME Y14.5M
   BSC: Basic Dimension. Theoretically exact value shown without tolerances.

Microchip Technology Drawing No. C04-2104A

3-Lead Plastic Small Outline Transistor (TT) [SOT-23]

Note: For the most current package drawings, please see the Microchip Packaging Specification located at http://www.microchip.com/packaging

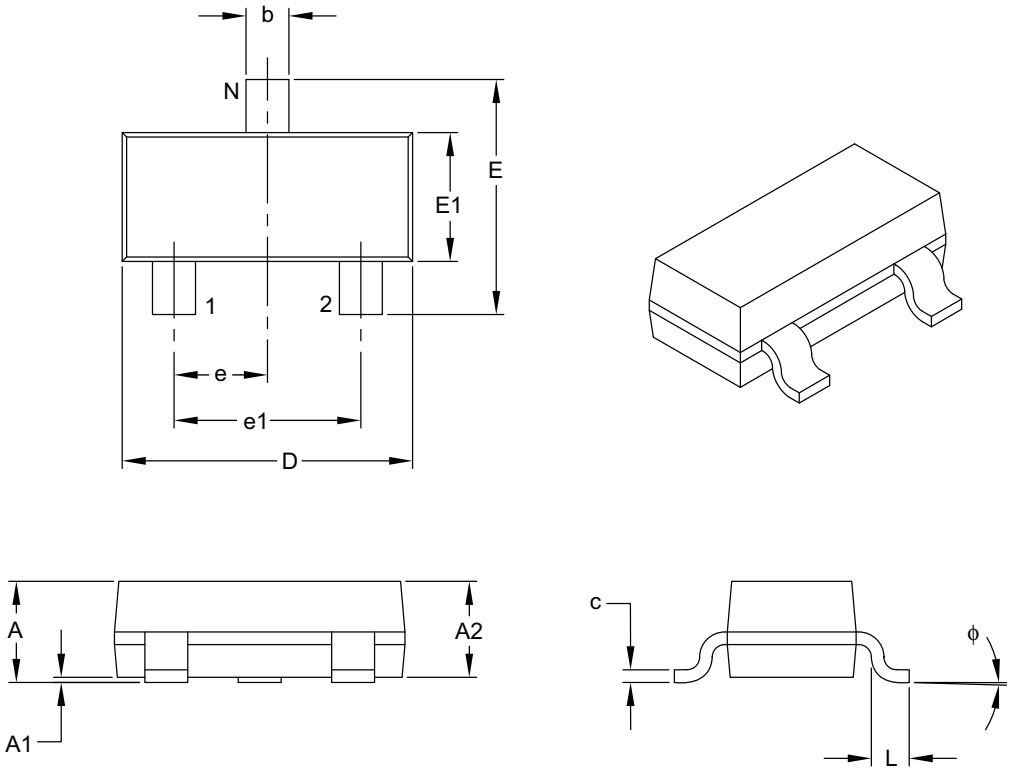

Units		MILLIMETERS		
Dimension Limits		MIN	NOM	MAX
Number of Pins	N	3		
Lead Pitch	e	0.95 BSC		
Outside Lead Pitch	e1	1.90 BSC		
Overall Height	A	0.89	–	1.12
Molded Package Thickness	A2	0.79	0.95	1.02
Standoff	A1	0.01	–	0.10
Overall Width	E	2.10	–	2.64
Molded Package Width	E1	1.16	1.30	1.40
Overall Length	D	2.67	2.90	3.05
Foot Length	L	0.13	0.50	0.60
Foot Angle	ϕ	0°	–	10°
Lead Thickness	c	0.08	–	0.20
Lead Width	b	0.30	–	0.54

Notes:

1. Dimensions D and E1 do not include mold flash or protrusions. Mold flash or protrusions shall not exceed 0.25 mm per side.
2. Dimensioning and tolerancing per ASME Y14.5M.
   BSC: Basic Dimension. Theoretically exact value shown without tolerances.

Microchip Technology Drawing C04-104B

3-Lead Plastic Small Outline Transistor (TT) [SOT-23]

Note: For the most current package drawings, please see the Microchip Packaging Specification located at http://www.microchip.com/packaging

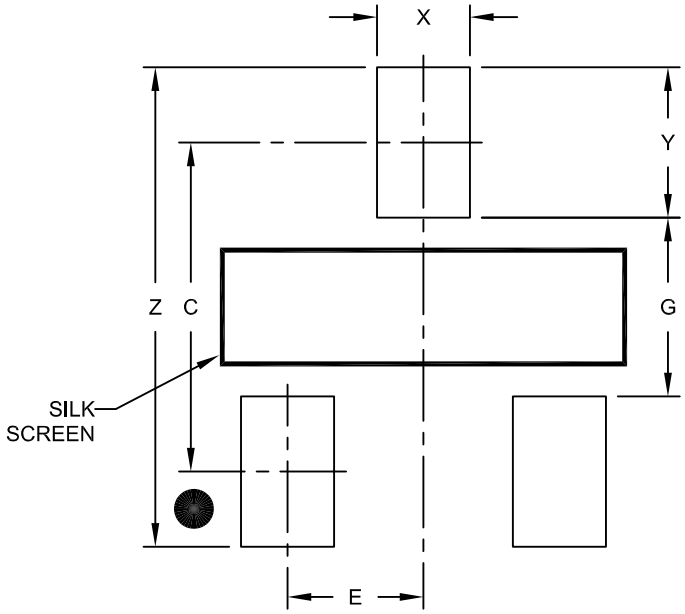

RECOMMENDED LAND PATTERN

Units		MILLIMETERS		
Dimension Limits		MIN	NOM	MAX
Contact Pitch	E		0.95 BSC	
Contact Pad Spacing	C		2.30	
Contact Pad Width (X3)	X			0.65
Contact Pad Length (X3)	Y			1.05
Distance Between Pads	G	1.25		
Overall Width	Z			3.35

Notes:

1. Dimensioning and tolerancing per ASME Y14.5M
   BSC: Basic Dimension. Theoretically exact value shown without tolerances.

Microchip Technology Drawing No. C04-2104A

13. Reference and Application Notes

The ATSHA204A implements a challenge-response protocol using either SHA-256 or HMAC/SHA-256, details are noted below. The response is always a 256-bit digest.

The `Nonce` command (see Section **`Nonce` Command**) accepts an input challenge from the system and optionally combines it with an internally generated random number to generate a nonce (for example number used once) for the calculation. The combination is the seed and it is then combined with a secret key as part of the authentication calculation for any of the crypto commands (for instance `MAC`, `HMAC`, `Read`, `Write`, or `GenDig`). The input challenge can also be passed directly to the `MAC` command.

The device can guarantee the uniqueness of the nonce only if the device has included the output of its RNG in the calculation; that is because the system input may or may not be unique. Every random nonce is in fact guaranteed to be unique when compared to all previous nonces, ensuring that each transaction is unique over all time.

13.1 SHA-256

The ATSHA204A `MAC` command calculates the digest of a secret key concatenated with the challenge or nonce. It optionally includes various other pieces of information stored on the device within the digested message.

The ATSHA204A computes the SHA-256 digest based on the algorithm documented at the following site:

http://csrc.nist.gov/publications/fips/fips180-2/fips180-2.pdf

The complete SHA-256 message processed by the ATSHA204A is listed in the command description for each command that use the algorithm. Most standard software implementations of the algorithm automatically add the appropriate number of pad and length bits to this message to match that the operation the device performs internally.

The ATSHA204A can also calculate a SHA-256 digest using the `SHA` command. The caller is responsible for providing the pad and length bytes to the message. Message size must be a multiple of 64 bytes including the pad bytes.

The SHA-256 algorithm is used for encryption by taking the output digest of the hash algorithm and XORing it with the plain text data to produce the ciphertext. Decryption is the reverse operation, namely the ciphertext is XORed with the digest with the result being the plain text.

13.2 HMAC/SHA-256

The response to the challenge can also be computed using the HMAC algorithm based on SHA-256 documented at the following site:

http://csrc.nist.gov/publications/fips/fips198/fips-198a.pdf

Because of the increased computation complexity, the `HMAC` command is not as flexible as the `MAC` command and the computation time for HMAC is extended. While the HMAC sequence is not necessary to ensure the security of the digest, it is included for compatibility with various software packages.

© 2018 Microchip Technology Inc.

13.3 Key Values

All keys within the SHA204A are 256 bits long. The ATSHA204A uses these keys as part of the messages that are hashed with the `MAC`, `CheckMac`, `HMAC` and `GenDig` commands. Any slot in the Data zone of the EEPROM can be used to store a key, however, the value is secret only if the read and write permissions are properly set within SlotConfig (including the IsSecret bit).

Except for the `GenDig` command, all but the least-significant four bits of the SlotID parameter are ignored in determining the source of key data. Only the least-significant four bits are used to select one of the slots of the Data zone. See Section **Transport Keys**, for information on how `GenDig` uses other SlotID values.

In all cases for which a SHA-256 calculation is performed using Param2, the entire 16-bit SlotID as input is included in the message.

13.3.1 Diversified Keys

If the host or validating entity has a place to securely store secrets, the key values stored in the EEPROM slot(s) can be diversified with the serial number embedded in the device (SN<0:8>). In this manner, every Client device can have a unique key, which can provide extra protection against known plaintext attacks and permit compromised serial numbers to be identified and blacklisted.

To implement this, a root secret is externally combined with the device's serial number during personalization using some cryptographic algorithm and the result written to the ATSHA204A key slot.

The ATSHA204A `CheckMac` command provides a mechanism of securely generating and comparing diversified keys, eliminating this requirement from the Host system.

Consult the following application note for more details:

http://ww1.microchip.com/downloads/en/appnotes/doc8666.pdf

13.3.2 Rolled Keys

In order to prevent repeated use of the same key value, the ATSHA204A supports key rolling. Normally, after a certain number of uses (perhaps as few as one), the current key value is replaced with the SHA-256 digest of its current value combined with some offset, which may either be a constant, something related to the current system (for example, a serial number or model number), or a random number.

This capability is implemented using the `DeriveKey` command. Prior to execution of the `DeriveKey` command, the `Nonce` command must be run to load the offset into TempKey. Each time the roll operation is performed on slots 0 through 7, the UpdateCount field for that slot is incremented.

One use of this capability is to permanently remove the original key from the device and replace it with a key that is only useful in a particular environment. After the key is rolled, there is no possible way to retrieve the old value, which improves the security of the system.

Any power interruption during the execution of the `DeriveKey` command in Roll mode may cause either the key or the UpdateCount to have an unknown value. If writing to a slot is enabled using bit number 14 of SlotConfig, such keys can be written in encrypted and authenticated form using the `Write` command. Alternatively, multiple copies of the key can be stored in multiple slots so that failure of a single slot does not incapacitate the system.

© 2018 Microchip Technology Inc.

13.3.3 Created Keys

In order to support unique ephemeral keys for every Client, the ATSHA204A also supports key creation. In this mechanism, a “parent” key (specified by SlotConfig.writeKey) is combined with a fixed or random nonce to create a unique key, which is then used for any cryptographic purpose.

The ability to create unique keys is especially useful if the parent key has usage restrictions (see Section **Limited-use Keys** and Section **Limited-use Key** in the following sections). In this mode, the limited use parent key can be employed to create an unlimited use child key. Because the child key is useful only for this particular Host-Client pair, attacks on its value are less valuable.

This capability is also implemented using the `DeriveKey` command. Prior to execution of the `DeriveKey` command, the `Nonce` command must be run to load the nonce value into TempKey. Each time the create operation is performed on slots 0 through 7; the UpdateCount field for that slot is incremented.

13.3.4 Limited-use Keys

For the SlotID values corresponding to slots 0 through 7 in the data section of the EEPROM, repeated usage of the key stored in the slot can be strictly limited. This feature is enabled if the LimitedUse bit is set in the SlotConfig field. The LimitedUse bit is ignored for slots 8 through 14. The number of remaining uses is stored as a bit map in the UseFlag byte corresponding to the slot in question.

Prior to execution of any cryptographic command that uses this slot as a key, the following takes place:

- If SlotConfig<SlotID>.LimitedUse is set and UseFlag<SlotID> is 0x00, the device returns an error.
- Starting at bit 7 of UseFlag<SlotID>, clear to zero the first bit that is currently a one.

In practice, this procedure permits LimitedUse keys to be used eight times between “refreshes” using the `DeriveKey` command. If power is lost during the execution of any command referencing a key that has this feature enabled, one of the use bits in UseFlag may still be cleared even though the command did not complete. For this reason, Microchip recommends that the key be used a single time only, with the other bits providing a safety margin for errors.

Under normal circumstances, all eight UseFlag bytes should be initialized to `0xFF`. If it is the intention to permit fewer than eight uses of a particular key, these bytes should be initialized to `0x7F` (seven uses), `0x3F` (six uses), `0x1F` (five uses), `0x0F` (four uses), `0x07` (three uses), `0x03` (two uses), or `0x01` (one use). Initialization to any other value besides these values or 0xFF is prohibited.

The `Read`, `Write` and `DeriveKey` commands operate slightly differently as noted below:

- **Read and Write**
  These commands ignore the state of the LimitedUse bit and the UseFlag byte does not change as a result of their execution. LimitedUse slots in which the UseFlag is exhausted (value of `0x00`) can still be read or written (subject to the appropriate SlotConfig limitations) although the value in the slot cannot ever be used as a key for cryptographic commands.

  If SlotConfig.WriteKey for slot X points back to X, but UseFlag<X> is exhausted, then encrypted writes to the slot never succeed because the prior `GenDig` command will have returned an error due to the usage limitation. A similar situation occurs with reads and ReadKey. Slots used as keys should never have IsSecret set to zero or WriteConfig set to always.
- **DeriveKey**
  If the parent key is used for either authentication or as the source, then if LimitedUse (for the parent) is set and UseFlag (also for the parent) is `0x00`, the `DeriveKey` command returns an error. The LimitedUse and UseFlag bits are ignored for the target key. When successfully executed,

DeriveKey always resets the UseFlag to `0xFF` for the target key. This is the only mechanism to reset the UseFlag bits.

Use of the `DeriveKey` command is optional. It is legal to be run only if WriteConfig<13> is set for this slot. In some situations, it may be advantageous to simply have a key that can be used eight times, in which case the other crypto commands clear the bits in UseFlag one at a time until all are cleared and at which time the key is disabled.

13.3.5 Limited-use Key

If Slot<15>.LimitedUse is set, usage of key number 15 is limited through a different mechanism than the single-use limitation described above, which applies only to slots 0 through 7.

Prior to any use of key 15 by a cryptographic command, the following takes place:

- If all bytes in LastKeyUse are `0x00`, return error.
- Starting at bit 7 of the first byte of LastKeyUse (byte 68 in the Configuration zone), clear to zero the first bit that is currently a one. If byte 68 is `0x00`, check bit seven of byte 69 and so on up through byte 83. Only a single bit is cleared each time prior to using key 15.

There is no reset mechanism for this limitation; after 128 uses (or the number of one bits set in LastKeyUse on personalization), key 15 is permanently disabled. This capability is not susceptible to power interruptions. Even if the power is interrupted during execution of the command, only a single bit in LastKeyUse is unknown; all other bits in LastKeyUse are unchanged and the key remains unchanged.

If fewer than 128 uses are desired for key 15, then some of the bytes within this array should not be initialized to `0xFF`. As with UseFlag, the only legal values for bytes within this field (besides `0xFF`) are `0x7F`, `0x3F`, `0x1F`, `0x0F`, `0x07`, `0x03`, `0x01`, or `0x00`. The total number of bits set to one indicates the number of uses.

Example: Limited Use count set to a value of 16.

```
0xFF, 0xFF, 0x00, 0x00, 0x00, 0x00, 0x00, 0x00,
0x00, 0x00, 0x00, 0x00, 0x00, 0x00, 0x00, 0x00
```

The LimitedUse bit is ignored by the `Read` and `Write` commands and LastKeyUse does not change as a result of their execution. The LimitedUse bit is ignored by the copy function of the `CheckMac` command. The LimitedUse bit is honored for the parent key in the `DeriveKey` command, but is ignored for the target key.

13.3.6 Password Checking

Many applications require a user to enter a password to enable features, decrypt stored data, or to pursue some other purpose. Typically, the expected password has to be stored somewhere in memory and therefore can become, subject to discovery. The ATSHA204A can securely store the expected password and perform a number of useful operations on it. The password is never passed in the clear to the device and it cannot be read from the device. It is hashed with a random number in the system software before being passed to the device. The nonce in TempKey must always have been generated using the internal RNG when a Transport Key is utilized.

The copy capability of the `CheckMac` command enables the following types of password checking options:

1. `CheckMac` does an internal comparison with the expected password and returns a Boolean to the system to indicate whether the password was correctly entered or not.

2. If the device determines that the correct password has been entered, then the value of the password can optionally be combined with a stored or ephemeral value to create a key that can be used by the system for data protection purposes.
3. If the device determines that the correct password has been entered, then the device can use this fact to optionally release a secondary high entropy secret, which can be used for data protection without the risk of an exhaustive dictionary attack.
4. If the password has been lost, an entity with knowledge of a parent key value can optionally write a new password into the slot. Optionally, the current value can be encrypted with a parent key and read from the device.

Passwords should be stored in even-numbered slots. If the password is to be mapped to a secondary value (use Step 3 above), then the target slot containing this value is located in the next higher slot number (the password slot number plus one); otherwise, the target slot is the same as the password slot.

ReadKey for the target slot must be set to `0x0` to enable this capability. In order to prevent fraudulent or unintended usage of this capability, do not set ReadKey for any slot to `0x0` unless this `CheckMac/Copy` capability is specifically required. In particular, do not assume that other bits in the configuration word for a particular slot override the enablement of this capability specified by ReadKey = `0x0`.

This capability is enabled only if the mode parameter to `CheckMac` has a value of `0x01` or `0x05` and TempKey.SourceFlag matches Mode<2>.

Note: Care should be taken when using Mode `0x05` as the system is subject to a replay attack; however, there may be some system configurations in which this arrangement is advantageous.

- The first 32 bytes of the SHA-256 message are stored in a data slot in the EEPROM (the password).
- The second 32 bytes of the SHA-256 message must be a randomly generated nonce in the TempKey register.

If the above conditions are met and the input response matches the internally generated digest, then the contents of the target key are copied to TempKey. The other TempKey register bits are set as follows:

- SourceFlag is set to one (not random).
- GenData is set to zero (not generated by the `GenData` command).
- CheckFlag is set to zero (TempKey is not restricted to the `CheckMac` command).
- Valid is set to one.

13.3.7 Transport Keys

The ATSHA204A device includes an internal hardware array of keys (transport keys) that are intended for secure personalization prior to locking of the data section. The values of the hardware keys are kept secret and are made available to qualified customers upon request to Microchip. These keys can be used with the `GenDig` command only and are indicated by a SlotID value greater than or equal to `0x8000`.

For `GenDig` and all other commands, SlotID values less than `0x8000` always reference keys that are stored in the Data zone of the EEPROM. In these cases, only the four least-significant bits of SlotID are used to determine the slot number, while the entire 16-bit SlotID as input is used in any SHA-256 message calculation.

© 2018 Microchip Technology Inc.

14. Revision History

Revision A (April 2018)

Original release of the document in the Microchip format.

This version replaces Atmel document revision 8885H from 11/2015.

The Microchip Web Site

Microchip provides online support via our web site at http://www.microchip.com/. This web site is used as a means to make files and information easily available to customers. Accessible by using your favorite Internet browser, the web site contains the following information:

- **Product Support** – Data sheets and errata, application notes and sample programs, design resources, user's guides and hardware support documents, latest software releases and archived software
- **General Technical Support** – Frequently Asked Questions (FAQ), technical support requests, online discussion groups, Microchip consultant program member listing
- **Business of Microchip** – Product selector and ordering guides, latest Microchip press releases, listing of seminars and events, listings of Microchip sales offices, distributors and factory representatives

Customer Change Notification Service

Microchip's customer notification service helps keep customers current on Microchip products. Subscribers will receive e-mail notification whenever there are changes, updates, revisions or errata related to a specified product family or development tool of interest.

To register, access the Microchip web site at http://www.microchip.com/. Under "Support", click on "Customer Change Notification" and follow the registration instructions.

Customer Support

Users of Microchip products can receive assistance through several channels:

- Distributor or Representative
- Local Sales Office
- Field Application Engineer (FAE)
- Technical Support

Customers should contact their distributor, representative or Field Application Engineer (FAE) for support. Local sales offices are also available to help customers. A listing of sales offices and locations is included in the back of this document.

Technical support is available through the web site at: http://www.microchip.com/support

© 2018 Microchip Technology Inc.

Product Identification System

To order or obtain information, e.g., on pricing or delivery, refer to the factory or the listed sales office.

PART NO.	-XXX	XX	-X
Device	Package	I/O Type	Tape and Reel

Device:	ATSHA204A: Cryptographic Co-processor with Secure Hardware-based Key Storage	
Package Options	SSH	= 8S1, 8-Lead (0.150” Wide Body), Plastic Gull Wing Small Outline (JEDEC SOIC)
	MAH	= 8MA2, 8-Pad 2 x 3 x 0.6 mm Body, Thermally Enhanced Plastic Ultra Thin Dual Flat No-Lead Package (UDFN)
	RBH	= 3RB, 3-Lead 2.5 x 6.5 mm Body, 2.0 mm pitch, CONTACT Package (Sawn).
I/O Type	CZ	= Single Wire Interface
	DA	= I^2C Interface
Tape and Reel Options	B	= Tube
	T	= Large Reel (Size varies by package type)
	S	= Small Reel (Only available for MAH)

Examples:

- ATSHA204A-SSHCZ-T: Single-Wire, Tape and Reel, 4,000 per Reel, 8-Lead SOIC package
- ATSHA204A-SSHCZ-B: Single-Wire, Tube, 100 per Tube, 8-Lead SOIC package
- ATSHA204A-SSHDA-T: I^2C, Tape and Reel, 4,000 per Reel, 8-Lead SOIC package
- ATSHA204A-SSHDA-B: I^2C, Tube, 100 per Tube, 8-Lead SOIC package
- ATSHA204A-MAHCZ-T: Single-Wire, Tape and Reel, 15,000 per Reel, 8-Pad UDFN package
- ATSHA204A-MAHDA-T: I^2C, Tape and Reel, 15,000 per Reel, 8-Pad UDFN package
- ATSHA204A-MAHCZ-S: Single-Wire, Tape and Reel, 3,000 per Reel, 8-Pad UDFN package
- ATSHA204A-MAHDA-S: I^2C, Tape and Reel, 3,000 per Reel, 8-Pad UDFN package
- ATSHA204A-RBHCZ-T: Single-Wire, Tape and Reel, 5,000 per Reel, 3-Lead Contact package
- ATSHA204A-RBHCZ-B: Single-Wire, Tube, 56 per Tube, 3-Lead Contact package
- ATSHA204A-STUCZ-T: Single Wire, Tape and Reel, 5000 per Reel, 3-Lead SOT-23 package
- ATSHA204A-XHDA-T:I^2C, Tape and Reel, 5000 per Reel, 8-Lead TSSOP package
- ATSHA204A-XHCZ-T: Single-Wire, Tape and Reel, 5000 per Reel, 8-Lead TSSOP package

Note:

© 2018 Microchip Technology Inc.

1. Tape and Reel identifier only appears in the catalog part number description. This identifier is used for ordering purposes and is not printed on the device package. Check with your Microchip Sales Office for package availability with the Tape and Reel option.
2. Small form-factor packaging options may be available. Please check http://www.microchip.com/packaging for small-form factor package availability, or contact your local Sales Office.

Microchip Devices Code Protection Feature

Note the following details of the code protection feature on Microchip devices:

- Microchip products meet the specification contained in their particular Microchip Data Sheet.
- Microchip believes that its family of products is one of the most secure families of its kind on the market today, when used in the intended manner and under normal conditions.
- There are dishonest and possibly illegal methods used to breach the code protection feature. All of these methods, to our knowledge, require using the Microchip products in a manner outside the operating specifications contained in Microchip's Data Sheets. Most likely, the person doing so is engaged in theft of intellectual property.
- Microchip is willing to work with the customer who is concerned about the integrity of their code.
- Neither Microchip nor any other semiconductor manufacturer can guarantee the security of their code. Code protection does not mean that we are guaranteeing the product as "unbreakable."

Code protection is constantly evolving. We at Microchip are committed to continuously improving the code protection features of our products. Attempts to break Microchip's code protection feature may be a violation of the Digital Millennium Copyright Act. If such acts allow unauthorized access to your software or other copyrighted work, you may have a right to sue for relief under that Act.

Legal Notice

Information contained in this publication regarding device applications and the like is provided only for your convenience and may be superseded by updates. It is your responsibility to ensure that your application meets with your specifications. MICROCHIP MAKES NO REPRESENTATIONS OR WARRANTIES OF ANY KIND WHETHER EXPRESS OR IMPLIED, WRITTEN OR ORAL, STATUTORY OR OTHERWISE, RELATED TO THE INFORMATION, INCLUDING BUT NOT LIMITED TO ITS CONDITION, QUALITY, PERFORMANCE, MERCHANTABILITY OR FITNESS FOR PURPOSE. Microchip disclaims all liability arising from this information and its use. Use of Microchip devices in life support and/or safety applications is entirely at the buyer's risk, and the buyer agrees to defend, indemnify and hold harmless Microchip from any and all damages, claims, suits, or expenses resulting from such use. No licenses are conveyed, implicitly or otherwise, under any Microchip intellectual property rights unless otherwise stated.

Trademarks

The Microchip name and logo, the Microchip logo, AnyRate, AVR, AVR logo, AVR Freaks, BeaconThings, BitCloud, CryptoMemory, CryptoRF, dsPIC, FlashFlex, flexPWR, Heldo, JukeBlox, KeeLoq, KeeLoq logo, Kleer, LANCheck, LINK MD, maXStylus, maXTouch, MediaLB, megaAVR, MOST, MOST logo, MPLAB, OptoLyzer, PIC, picoPower, PICSTART, PIC32 logo, Prochip Designer, QTouch, RightTouch, SAM-BA, SpyNIC, SST, SST Logo, SuperFlash, tinyAVR, UNI/O, and XMEGA are registered trademarks of Microchip Technology Incorporated in the U.S.A. and other countries.

© 2018 Microchip Technology Inc.

ClockWorks, The Embedded Control Solutions Company, EtherSynch, Hyper Speed Control, HyperLight Load, IntelliMOS, mTouch, Precision Edge, and Quiet-Wire are registered trademarks of Microchip Technology Incorporated in the U.S.A.

Adjacent Key Suppression, AKS, Analog-for-the-Digital Age, Any Capacitor, AnyIn, AnyOut, BodyCom, chipKIT, chipKIT logo, CodeGuard, CryptoAuthentication, CryptoCompanion, CryptoController, dsPICDEM, dsPICDEM.net, Dynamic Average Matching, DAM, ECAN, EtherGREEN, In-Circuit Serial Programming, ICSP, Inter-Chip Connectivity, JitterBlocker, KleerNet, KleerNet logo, Mindi, MiWi, motorBench, MPASM, MPF, MPLAB Certified logo, MPLIB, MPLINK, MultiTRAK, NetDetach, Omniscient Code Generation, PICDEM, PICDEM.net, PICkit, PICtail, PureSilicon, QMatrix, RightTouch logo, REAL ICE, Ripple Blocker, SAM-ICE, Serial Quad I/O, SMART-I.S., SQI, SuperSwitcher, SuperSwitcher II, Total Endurance, TSHARC, USBCheck, VariSense, ViewSpan, WiperLock, Wireless DNA, and ZENA are trademarks of Microchip Technology Incorporated in the U.S.A. and other countries.

SQTP is a service mark of Microchip Technology Incorporated in the U.S.A.

Silicon Storage Technology is a registered trademark of Microchip Technology Inc. in other countries.

GestIC is a registered trademark of Microchip Technology Germany II GmbH & Co. KG, a subsidiary of Microchip Technology Inc., in other countries.

All other trademarks mentioned herein are property of their respective companies.

© 2018, Microchip Technology Incorporated, Printed in the U.S.A., All Rights Reserved.

ISBN: 978-1-5224-2809-1

Quality Management System Certified by DNV

ISO/TS 16949

Microchip received ISO/TS-16949:2009 certification for its worldwide headquarters, design and wafer fabrication facilities in Chandler and Tempe, Arizona; Gresham, Oregon and design centers in California and India. The Company's quality system processes and procedures are for its PIC® MCUs and dsPIC® DSCs, KEELOQ® code hopping devices, Serial EEPROMs, microperipherals, nonvolatile memory and analog products. In addition, Microchip's quality system for the design and manufacture of development systems is ISO 9001:2000 certified.

Worldwide Sales and Service

AMERICAS	ASIA/PACIFIC	ASIA/PACIFIC	EUROPE
Corporate Office 2355 West Chandler Blvd. Chandler, AZ 85224-6199 Tel: 480-792-7200 Fax: 480-792-7277 Technical Support: http://www.microchip.com/support Web Address: www.microchip.com **Atlanta** Duluth, GA Tel: 678-957-9614 Fax: 678-957-1455 **Austin, TX** Tel: 512-257-3370 **Boston** Westborough, MA Tel: 774-760-0087 Fax: 774-760-0088 **Chicago** Itasca, IL Tel: 630-285-0071 Fax: 630-285-0075 **Dallas** Addison, TX Tel: 972-818-7423 Fax: 972-818-2924 **Detroit** Novi, MI Tel: 248-848-4000 **Houston, TX** Tel: 281-894-5983 **Indianapolis** Noblesville, IN Tel: 317-773-8323 Fax: 317-773-5453 Tel: 317-536-2380 **Los Angeles** Mission Viejo, CA Tel: 949-462-9523 Fax: 949-462-9608 Tel: 951-273-7800 **Raleigh, NC** Tel: 919-844-7510 **New York, NY** Tel: 631-435-6000 **San Jose, CA** Tel: 408-735-9110 Tel: 408-436-4270 **Canada - Toronto** Tel: 905-695-1980 Fax: 905-695-2078	**Australia - Sydney** Tel: 61-2-9868-6733 **China - Beijing** Tel: 86-10-8569-7000 **China - Chengdu** Tel: 86-28-8665-5511 **China - Chongqing** Tel: 86-23-8980-9588 **China - Dongguan** Tel: 86-769-8702-9880 **China - Guangzhou** Tel: 86-20-8755-8029 **China - Hangzhou** Tel: 86-571-8792-8115 **China - Hong Kong SAR** Tel: 852-2943-5100 **China - Nanjing** Tel: 86-25-8473-2460 **China - Qingdao** Tel: 86-532-8502-7355 **China - Shanghai** Tel: 86-21-3326-8000 **China - Shenyang** Tel: 86-24-2334-2829 **China - Shenzhen** Tel: 86-755-8864-2200 **China - Suzhou** Tel: 86-186-6233-1526 **China - Wuhan** Tel: 86-27-5980-5300 **China - Xian** Tel: 86-29-8833-7252 **China - Xiamen** Tel: 86-592-2388138 **China - Zhuhai** Tel: 86-756-3210040	**India - Bangalore** Tel: 91-80-3090-4444 **India - New Delhi** Tel: 91-11-4160-8631 **India - Pune** Tel: 91-20-4121-0141 **Japan - Osaka** Tel: 81-6-6152-7160 **Japan - Tokyo** Tel: 81-3-6880- 3770 **Korea - Daegu** Tel: 82-53-744-4301 **Korea - Seoul** Tel: 82-2-554-7200 **Malaysia - Kuala Lumpur** Tel: 60-3-7651-7906 **Malaysia - Penang** Tel: 60-4-227-8870 **Philippines - Manila** Tel: 63-2-634-9065 **Singapore** Tel: 65-6334-8870 **Taiwan - Hsin Chu** Tel: 886-3-577-8366 **Taiwan - Kaohsiung** Tel: 886-7-213-7830 **Taiwan - Taipei** Tel: 886-2-2508-8600 **Thailand - Bangkok** Tel: 66-2-694-1351 **Vietnam - Ho Chi Minh** Tel: 84-28-5448-2100	**Austria - Wels** Tel: 43-7242-2244-39 Fax: 43-7242-2244-393 **Denmark - Copenhagen** Tel: 45-4450-2828 Fax: 45-4485-2829 **Finland - Espoo** Tel: 358-9-4520-820 **France - Paris** Tel: 33-1-69-53-63-20 Fax: 33-1-69-30-90-79 **Germany - Garching** Tel: 49-8931-9700 **Germany - Haan** Tel: 49-2129-3766400 **Germany - Heilbronn** Tel: 49-7131-67-3636 **Germany - Karlsruhe** Tel: 49-721-625370 **Germany - Munich** Tel: 49-89-627-144-0 Fax: 49-89-627-144-44 **Germany - Rosenheim** Tel: 49-8031-354-560 **Israel - Ra'anana** Tel: 972-9-744-7705 **Italy - Milan** Tel: 39-0331-742611 Fax: 39-0331-466781 **Italy - Padova** Tel: 39-049-7625286 **Netherlands - Drunen** Tel: 31-416-690399 Fax: 31-416-690340 **Norway - Trondheim** Tel: 47-7289-7561 **Poland - Warsaw** Tel: 48-22-3325737 **Romania - Bucharest** Tel: 40-21-407-87-50 **Spain - Madrid** Tel: 34-91-708-08-90 Fax: 34-91-708-08-91 **Sweden - Gothenberg** Tel: 46-31-704-60-40 **Sweden - Stockholm** Tel: 46-8-5090-4654 **UK - Wokingham** Tel: 44-118-921-5800 Fax: 44-118-921-5820

© 2018 Microchip Technology Inc.